THE

J. Bonnycastle

ELEMENTS

U.S.C. AND G. SURVEY,
LIBRARY AND ARCHIVES

OF

Acc. No. 8238

OPTICS.

IN FOUR BOOKS.

BOOK I. SIMPLE OPTICS, or Direct Vision.

BOOK II. CATOPTRICS, or Reflected Vision.

BOOK III. DIOPTRICS, or Refracted Vision.

BOOK IV. The Construction of OPTICAL INSTRUMENTS.

120

Discite ô miseri, et causas cognoscite rerum.
PERS. SAT. III.

LONDON:
Printed for J. NOURSE, in the Strand,
Bookseller in Ordinary to His MAJESTY.

M DCC LXVIII.

1768

National Oceanic and Atmospheric Administration

Rare Books from 1600-1800

ERRATA NOTICE

One or more conditions of the original document may affect the quality of the image, such as:

Discolored pages
Faded or light ink
Biding intrudes into text

This has been a co-operative project between NOAA central library, the Climate Database Modernization Program, National Climate Data Center (NCDC) and the NOAA 200th Celebration. To view the original document, please contact the NOAA Central Library in Silver Spring, MD at (301) 713-2607 x 124 or at Library.Reference@noaa.gov

HOV Services
Imaging Contractor
12200 Kiln Court
Beltsville, MD 20704-1387
April 8, 2009

U. S. C. & G. SURVEY
LIBRARY
AND
ARCHIVES
No. 8238
Shelf 535
Case E 53

THE

ELEMENTS

OF

OPTICS.

This Book is the Property of the
U. S. COAST AND GEODETIC SURVEY,
and must be returned to the Library
if not [illegible] Laboratory
of the [illegible] Expiration.

THE

PREFACE.

THE Ancients, whilst they made a pretence of studying Philosophy, and searching out the causes of natural things, had no other method to proceed by, than forming hypothetical conjectures out of their own heads according to their various fancies, without any foundation in the nature of things. And then they endeavoured to defend their hypotheses, by plausible arguments of wit, and the figures of Logic; by which they flattered themselves, they had fully established their hypotheses, and given a true account of natural causes and effects, and that beyond the possibility of any opposition. And all this while they had not the least thought of making so much as one experiment, to confirm the truth of their theories; which is the only possible way, that any theory in nature can be established. By this means it came to pass, that their philosophy was no more than a philosophy of words and empty sounds, consisting of endless terms of art, without any meaning or ideas annext to them. And whilst they proceeded in this absurd method, true philosophy was quite at a stand, and made no manner of progress; and the nature of things remained perfectly unknown. Let any operation in nature be proposed, and they presently had a name for it; and a few terms of art were to explain its nature, though they could not give us the least notion, how or by what

causes such an operation or effect was brought about. And thus they imagined they could solve every difficulty in nature, by the mere magic of sounds. Examples of this way of proceeding are endless; but there is nothing in which they have blundered more egregiously, than in explaining the nature of light, and the manner of vision.

But the moderns finding themselves no wiser by this philosophical gibberish, found it necessary to pursue another method. They saw plainly, that the nature of things could never be known without careful observation and experience; therefore they set about to make all the experiments upon any subject, that could possibly be made. By this means they could find out what causes could produce such and such effects, what causes and effects were linked together, and always accompanied one another; and what proportion they bore to one another; and after they had found these things in one subject, by applying the same method to other subjects of the same kind; they could find how far these laws were general, and agreeable to all of that sort. In prosecuting this method, it is found, that there are some properties that belong but to a few kinds of bodies, and some that belong to a great many kinds; and some properties that belong universally to all bodies: this teaches us something; and the nature and properties of bodies, thus found out by experiments, is called Experimental Philosophy. *By this method our great* Newton, *the Prince of Philosophers, found out the nature of light, he analized it, and dissolved it into its constituent particles. He has shewn us, that light consists of particles of different colours, and different degrees of refrangibility; and that the colour of each ray of it is permanent and lasting; and its degree of refrangibility invariable: that the particular colour of it can never be changed by any refraction or reflection. But before that, Philosophers were all of opinion, that light had no difference or variety of its constituent*

ſtituent parts, but was in its own nature, ſimple and uniform; and that colours were nothing but certain modifications of the light, or dilatations of the rays, cauſed by reflexions and refractions; whereas they depend upon a real ſeparation of the heterogeneous rays. And all optic writers were generally of opinion, that the reflexion of light was cauſed by the particles thereof ſtriking againſt the ſolid parts of bodies, which they could not enter into, and thence repelled back again, like other reflected bodies. But Sir J. Newton *has ſhewn, that they are driven back and reflected before they touch the body; and that by ſome inherent power in the reflecting body, which acts at a ſmall diſtance from its ſurface, in lines perpendicular thereto.*

Who could ever have thought, that the opacity of bodies depended on their poroſity; and yet the ſame great Philoſopher has ſhewn, that their opacity ariſes from the multiplicity of reflections within the pores of bodies, when the particles are of a determinate ſize. And the ſame bodies become tranſparent, when their pores are filled with a medium of the ſame denſity as the particles of the body.

It is now put paſt diſpute, that viſion is cauſed by the rays of light entering the eye; and painting the image of the object, upon the retina at the bottom of the eye. If theſe rays paſs thro' the ſame medium continued between the object and the eye, then they come from every part of the object to the eye in right lines; then this is called Direct Viſion. *When the rays come not directly to the eye from the object, but fall upon ſome poliſhed body, and are reflected from thence to the eye, in which they form the image of that object; then this ſort of viſion is called* Reflex Viſion. *Here the eye properly ſees the image cauſed by the reflexion, and not the object itſelf. A body muſt be truly poliſhed to give a perfect image by reflection; for a rough uneven ſurface ſcatters the rays, that they make no image, or a very deformed one. If*

the rays passing from the object to the eye, go thro' different mediums, as air, water, glass, &c. then the rays will be refracted at entering a different medium, and come to the eye in other right lines, of different direction from the former; and this is called Refracted Vision. *So that there are three different cases of vision, whereby objects may be seen; and these make three distinct parts of the science of* Optics; *of which the first is the most simple, and the last the most complex.*

Since we find the properties of light to agree with the known properties of body, we cannot suppose light to be any thing else but a body, consisting of exceeding small particles; which are continually shaken off by the vibrating motion of the luminous body, and expelled by the repellent power thereof, with incredible velocity from it in all directions. Some of which, by their exceeding smallness and tenuity, go thro' every point of space. Some of these enter our eyes, whose texture and construction is properly adapted thereto, and do there by their motion excite vibrations in the optic nerves, by which we have the sensation of seeing; and by the wonderful structure of our eyes, give us certain intelligence of objects existing without us, and their affections, such as their size, form, colour, motion, and even their distance: so that vision is not made at random, but is performed by certain uniform and steady laws.

It appears by experiment, that light consists of parts both successive and contemporary. For one may stop that which comes one moment, and let that pass which comes the next. One may also stop it in one place, and let it pass in another. And the part that is stopt cannot be the same with the part that is gone past.

As vision is the most useful, as well as the most delightful sense we have; so that science which teaches the improvement and perfection of this sense, must be the most valuable of any, and that is Optics, *which not only explains the manner of vision, but from the*

same

same principles teaches how to supply a proper help for bad eyes, and to remedy the several defects of our sight, by the help of proper instruments contrived according to the rules of this art, such as spectacles, reading glasses, telescopes, microscopes, &c. and to this art is owing the invention of several instruments, which by curious and surprizing operations, give us the most exquisite delight; such as the camera obscura, the magic lanthorn, the perspective views of countries, &c. so that it is a science of infinite pleasure as well as profit.

Were there no other use of Optics, but the contrivance of spectacles, to help the eyes of old men and purblind people; yet that alone would be sufficient to recommend the study of it. Of what infinite advantage are these to mankind, not one in a thousand, but what has need of their help, at some time of life, especially in old age. For as the sight is the most noble and most extensive of all our senses; and as we can go about no concerns in life without making use of our eyes; certainly the instrument must be the most valuable, which relieves the decayed eyes, and cures their defects, and makes them useful, and without which, they would be almost useless. They are certainly in a miserable condition that have the two windows of the soul shut up, and are obliged to live in perpetual darkness. And such as have them partly obscured, partake of the same misery in some degree. How miserable would the latter part of men's lives be, if there were no such thing as spectacles; and how tedious must the lives of old people have been before their invention. Without them a mechanic grown old could not follow his business, such as watchmakers, engravers, &c. nor a scholar converse with his books, or with his friends by letter. So that this curious invention cannot be too highly valued.

Our

Our natural ſight is confined to very narrow views, and tho' it is very extenſive, yet ſome objects at a diſtance are ſcarce perceptible, while others more remote, cannot be ſeen at all. Here then we have the advantage of teleſcopes, by which we can behold very remote objects very clearly; thus we can have a full view of the heavenly bodies, and by that means underſtand the wonderful mechaniſm of the world; without this inſtrument, all theſe charming ſcenes of nature, ſo far diſtant, would be hid from us. This noble inſtrument then can never be ſufficiently recommended, that has opened a way for our diſcoveries in the heavens, which could never be known by any other means. By this, the whole ſyſtem of nature is laid open to our view. By this we find the ſun to be a great globe of fire; that the planets revolve about him; and that from their different phaſes, they have no light but what they receive from him. By the dark ſpots upon their ſurfaces, are found the times of rotation round their axes. The ſame inſtrument has given us intelligence of the ſatellites of Jupiter and Saturn, which move round theſe planets, in their fixt periodic times; a thing utterly unknown to the ancients. And theſe are of great uſe for determining the longitude; and from thence the motion of light has been proved. Saturn's ring is another diſcovery owing to the teleſcope. The motion of all the heavenly bodies, their diſtances and magnitudes have been hereby found out. The immenſe diſtance of the fixt ſtars is proved by the teleſcope; and by this we diſcover almoſt an infinite number of ſtars more than can be ſeen with the naked eye. Likewiſe all that has been diſcovered of the comets is owing to the uſe of the teleſcope. And by it the times of the beginning and ending of eclipſes are exactly determined, with many other things of like nature, equally aſtoniſhing and curious. The advancement of aſtronomy is wholly from the uſe

of

of the telescope. Telescopes may be also usefully employed upon the earth. The merchant may at a great distance discern his ships upon the sea. The seaman may see the enemies ships at a distance; or he may see land from the mast head, long before he comes at it. Generals may survey the army of his enemy, or his own. And any man may take a view of distant towns, cities, buildings, trees, and other objects in the country, especially when he is seated on a high place. These are noble discoveries of the telescope; which, if it had been known to the ancients, would have put an end to all their doubts and disputes about the solar system.

If a telescope be fixed in a certain position, and thro' it we see the top of a tower, &c. at noon, we shall see the lower part of it at night, or in the morning, owing to a greater refraction at morn and night.

The microscope discovers to us another world of wonders. And here our contemplations may be endless, all bodies we look at, shewing us such curious contexture of parts, and affording such admirable appearances, and such glorious colours, as cannot be well conceived without seeing them.

The very small parts of bodies cannot be distinguished by the eye, they subtend an angle so very small; and if they are brought nearer to subtend a greater angle, they come without the limits of distinct vision. For the eye cannot contract itself further than for an object at 4 inches distance to appear distinct. If it is brought nearer, it will appear confused; and the more confused, the nearer it is. This confusion may be prevented either by looking thro' a hole in a thin plate of lead, whose aperture must be the less, the nearer the object is; or else by interposing a microscope glass, between the object and the eye, to look thro'.

To mention in particular some discoveries made by the microscope. The skin of a human body is compos-

ed

ed of several scales lying over one another; between these layers of scales the excretory ducts appear, thro' which we perspire; there are about 500 of these ducts for one scale, and 250 scales are but equal to a grain of sand. The particles of dust flying out of the puff ball, are perfect spheres of an orange colour, and their diameters not above $\frac{1}{50}$ of an hair's breadth. The circulation of the blood is seen by the microscope, in the fins and tales of fishes, and the feet of frogs, and the insertion of the veins and arteries made visible. Hence also may be seen the armour of the flea, the snout of the tick, the bristles of the mite, the motion of the muscles, and the pulse in a louse. Many imperceptible animals may be seen with this instrument, in green weeds, which grow in water, and in standing water; in the hollow of the cabbage and teazle; and swarms of them in the water that drains from a horse dunghill; small animals lodged in the scabs of such as have the itch. It would be an infinite labour to mention all the wonders that this little instrument shews us.

Thus it appears, that Optics is not only a science of the most extensive use, but likewise of the greatest pleasure and delight. A great many things in philosophy can neither be understood nor prosecuted without the knowledge of Optics. This gives an account of Light, Colours, Opacity, Transparency, Brightness, Faintness, &c. The same science also accounts for the appearances of meteors, the Rainbow, Coronas, Parahelion's, Paraselene's; it gives account of the nature of seeing; without it nothing can be done in astronomy. Optics also brings forth Perspective, in which every rule of it is founded.

Spectacles were not found out till the beginning of the 13th century. For the ancients had no knowledge of optic glasses, as is evident from their universal silence in this matter. Not one of them giving the least

least hint thereof. And without doubt an invention of such universal use to the world could never be concealed. But the use of single glasses was known 300 *years before men understood how to combine them in telescopes. They knew nothing of the advantage the eye received thereby, by increasing its power some thousands of times beyond its natural abilities. For telescopes were not invented till about the year* 1600, *nor microscopes till* 10 *or* 12 *years after.*

Many effects produced by optic glasses seem wonderful and surprizing. A multitude of objects seem diffused thro' a large space where there is no space; and objects seem hanging in the air, where upon trial we can feel nothing. Objects appear sometimes greater, and sometimes less than they are; and sometimes pretty, and sometimes deformed. And they that understand the principles of Optics and Perspective, easily understand the reason of these phænomena. Optics also tends to free the mind from several prejudices it had imbibed; and when glasses are at hand to demonstrate their effects by experiment, it gives a vast pleasure to the mind, to see the Theory and Practice agree, and at once confirms us in the truth of the Principles. And these experiments insinuate to us, the great affinity there is between reason and experience; a matter of the greatest consequence in all kinds of science; as such an agreement conduces more than any thing else, to the certainty thereof, by freeing the mind from all doubt, and fixing a firm assent therein.

From what has been said, and many more things that might be said, appears plainly the excellency of the science of Optics, and its great use to mankind above all others; and how necessary it is for us to be acquainted with it, to let us into the secrets of nature, not only in regard to the grand fabric of the whole universe, but likewise to the most minute and imperceptible parts of it.

As

As to this Treatise, I have handled the three different parts of the science distinctly; and treated of each of them as clearly as I could; and in as short and concise a manner, as I could think on; and have demonstrated all the principles in a short way, and in a method very natural and plain; omitting nothing that I could think conducive to the advancement of this science, or could find in the most approved authors. And in the last book have described several optical instruments, and demonstrated their powers and effects, which I hope will be acceptable to the reader.

W. Emerson.

A Sy-

A Synopsis, or ſhort View of the Contents of this Treatiſe.

BOOK I. Simple Optics.

OF direct viſion. Of the nature of light, and how the colours are generated by refraction thro' a priſm. The apparent places, magnitude, and brightneſs of objects ſeen directly. The colours of natural bodies how cauſed. Fits of eaſy tranſmiſſion and reflexion of the rays of light. The action of light and bodies upon one another. The motion of light is performed in time. The proportion of moon-light, &c. to day-light.

BOOK II. Catoptrics.

The reflexion of light from plane and ſpherical ſurfaces. A general theorem for finding the focus. Of images, their places, diſtances, poſitions, magnitudes, motions, and brightneſs. Burning concaves. The aberration of the rays.

BOOK III. Dioptrics.

The refraction of light thro' one or more refracting ſurfaces. The power of different bodies to refract light. Of finding the focus of rays refracted by plane and ſpherical ſurfaces. A general theorem for finding the focus of rays refracted by a ſpherical ſurface. General theorems for finding the foci, for all ſorts of lenſes. The conjugate foci of all lenſes determined. To find the focus, and the vertex of a lens by experiment. Images made by refraction their places, diſtances, poſitions, magnitudes, ſhapes, motions, and brightneſs. Burning glaſſes. Aberration of the rays.

The

BOOK IV. Optical Instruments.

The combination of glasses. Of vision, and the structure of the eye. Telescopes with 2, 3, 4, glasses; their magnifying powers, distinctness, brightness, and visual angle. Table of their dimensions. The solar telescope. Telescopic sights, and taking angles. Telescopes without tubes. Reflecting telescopes; Gregory's, Cassegrain's, Newton's; their magnifying powers, distinctness, brightness, and visual angle. Tables of their dimensions. To find the magnifying power of a telescope by experiment. A single microscope, its magnifying power and brightness. A double microscope, its magnifying power, brightness, and visual angle. A reflecting microscope. The solar microscope. The magic lanthorn. Portable camera obscura, several kinds of them. Several machines for shewing perspective views. Explanation of the colours of the rainbow.

OPTICS.

DEFINITIONS.

DEF. I.

OPTICS, is a ſcience which teaches the nature of viſion; and of every thing relating to the ſight.

DEF. II.

A *Ray* of light, is an extremely ſmall part of it moving in a right line, or otherwiſe.

DEF. III.

A *Beam* of light is a ſenſible part of it, conſiſting of a great number of rays.

DEF. IV.

A *Pencil* of rays, is a portion of light of a conical form, proceeding from a point, or elſe tending to a point.

DEF. V.

Parallel Rays, are ſuch as run in parallel directions; and *converging rays*, are thoſe that tend to a point; and *diverging rays*, are ſuch as proceed from a point.

DEF. VI.

A *Medium*, is whatever the rays of light paſs thro', as water, oil, glaſs, air, or any tranſparent body; and even a vacuum.

DEF. VII.

Reflexion, is when a ray of light flies off from the ſurface is falls upon, without entering into it.

DEF. VIII.

Refraction, is the bending or breaking of a ray of light, where it goes out of one medium into another.

DEF. IX.

The *Angle of Incidence*, is the angle made by the incident ray, and the perpendicular to that point of the ſurface on which the ray falls.

DEF. X.

The *Angle of Reflexion*, is the angle comprehended between the reflected ray, and the perpendicular on that point of the ſurface, on which it falls.

DEF. XI.

The *Angle of Refraction*, is the angle which the refracted ray contains with the perpendicular to the refracting ſurface, at the point of incidence. And the *refracted angle*, is that contained between the incident and refracted rays.

DEF. XII.

The *Focus*, is a point in which all the reflected or refracted rays meet together. The point from which the rays ſeem to diverge, is called the *virtual Focus*. The point to which parallel rays are reflected or refracted, is the *principal Focus*.

DEF. XIII.

The *focal Diſtance*, is the diſtance of the focus from the reflecting or refracting ſurface. This generally relates to the principal focus.

DEF. XIV.

Conjugate Foci, are two ſuch points, that either of them being the radiant point, the other will be the focus.

BOOK

Fig.

BOOK I.

Of DIRECT VISION, *and ſuch Properties of Light, as are deduced from Experiments.*

PROP. I.

WHEN the eye views many objects at great diſtances, it refers all their places to the ſurface of a ſphere, whoſe center is the eye itſelf.

For as far as an eye can ſee diſtinctly in any one direction, ſo far it can ſee in any other direction, if not hindered by intermediate bodies; and this it can do quite round. Hence, when the objects we look at, are at great diſtances, it is natural to ſuppoſe them at equal diſtances. For under equal circumſtances, nothing appears to make one diſtance to be judged greater than another. Therefore we take the ſimpleſt way, and ſuppoſe them all equidiſtant, or conſider them as ſo. Whence theſe diſtances being all equal or ſuppoſed equal, and all proceeding from one point, it it plain they are the radii of a ſpherical ſurface, whoſe center is that point. That is, the eye places all theſe objects in the ſurface of a ſphere whoſe center is the eye itſelf.

Cor. 1. *The eye is always placed in the center of its own view.*

Cor. 2. *Any portion of the heavens which falls under our view, appears as the portion of the concave ſurface of a ſphere.*

Fig. Cor. 3. *When we look at the ſun, moon, and ſtars; or even at the clouds; they appear to us to be ſituated in the ſurface of one and the ſame ſphere.*

For theſe objects being beyond the extent of diſtinct viſion, therefore the eye cannot judge of their true diſtances. Therefore they will appear to us, as all ſituated in the ſurface of the ſame ſphere, and ſo equally diſtant. Tho' they be really at different diſtances from us.

Cor. 4. *Hence if the eye was to have a full view, from any place on the ſurface of the earth; it could ſee no more than a hemiſphere.*

For the horizon cuts off the other hemiſphere; and the body of the earth below that, hinders us from ſeeing any thing at a great diſtance.

Cor. 5. *The eye, keeping a fixed poſition, can ſee no more objects than are contained in a hemiſphere lying directly before the eye, nor quite ſo much.*

For if the baſe of this hemiſphere is ſuppoſed to touch the pupil of the eye; no rays can enter below that baſe; nor even in the plane of this baſe or near it, to cauſe any diſtinct viſion.

PROP. II.

Such rays as enter the eye perpendicularly, have the greateſt power to cauſe diſtinct viſion.

This is matter of obſervation. And it is plain that rays that are oblique have leſs force to produce their effects; and may be ſo oblique as to produce no ſenſible effect at all. Therefore thoſe rays that are moſt direct, are moſt efficacious in cauſing viſion; as they will fall perpendicularly upon the retina, at the bottom of the eye. And by theſe the image of any object will be painted moſt diſtinctly upon the retina.

Cor.

Cor. *Hence, we ſee objects the moſt diſtinctly, which are directly before our eyes.* Fig.

This is plain from this Prop. And is confirmed by experience, as is evident by our turning our eyes directly to the object; or from one part of an object to another, in order to ſee it clearer.

PROP. III.

An object appears greater or leſs, according as it is ſeen under a greater or leſſer angle. 1.

Let AC*a* be the axis of the eye; AB, DE two equal objects. To the eye at C, draw BC*b*, and EC*c*. Then the object BA appears under the angle BCA, or *bca*, and ED under the angle ECD or *e*C*a*. But *e*C*a* is greater than *b*C*a*; and *ae* greater than *ab*. But *ae*, *ab* are the appearances or pictures of the objects DE, AB, upon the retina. Therefore the former appears greater than the latter.

Cor. 1. *The diſtance between two objects* A *and* B, *appears to be greater as the diſtance of the ſpectator is leſs.*

For at the diſtance CD, the diſtance of the objects appears under the angle ECD or *e*C*a*. And at the diſtance AC, it appears under the angle BCA or *b*C*a*.

Cor. 2. *The apparent linear magnitude of an object* AB, *is reciprocally as the diſtance* CA.

For AB appears no greater than DF. But DF : DE or AB : : CD : CA. That is, the apparent magnitude of AB : apparent magnitude of DE : : CD : CA.

Cor. 3. *The ſuperficial apparent magnitude of an object, is reciprocally as the ſquare of the diſtance.*

Fig. 1. For the apparent hights will be reciprocally as the diſtance. And for the ſame reaſon, the apparent breadths will alſo be reciprocally as the diſtance. Therefore the apparent ſurface compounded of theſe, will be reciprocally as the ſquare of the diſtance.

Cor. 4. *A perſon, eſpecially at great diſtances, judges that object to be greateſt; which appears under the greateſt angle.*

For nature always takes the eaſieſt way; and it's eaſier to ſuppoſe things at the ſame diſtance, than at different diſtances, when nothing appears to the contrary. And at equal diſtances, a greater object will appear under a greater angle.

PROP. IV.

An object appears ſituated in that place, from which the rays laſt of all diverge, in coming to the ſpectator's eye.

For by frequent experience, a man always finds an object ſituated in that place from which the rays diverge, and come directly to his eye. And being uſed to this, he judges ſo always. For if the rays had been brought there by reflexion or refraction, they make the ſame picture in the bottom of the eye as if they had come directly from that place. And all viſion being performed by the pictures upon the retina; when theſe are alike, we muſt judge the ſituation of the object to be alike. Thus an object which appears by reflexion in a looking glaſs appears behind the glaſs; and an object ſeen thro' a ſpectacle glaſs appears further off. And a ſhilling in the bottom of a veſſel of water appears higher, and the water appears ſhallower, than it is.

PROP.

Fig.

PROP. V.

From every point of a luminous object, the rays of light diverge, and flow every where in right lines, thro' the same medium.

For if the rays do not flow from every part of the object, such parts as have none flowing from them cannot be visible, since nothing can be seen without light, either innate or reflected. And it flows in all manner of directions, because in any situation of the eye the same part of the object appears and may be seen. And being visible in all situations, the light must flow in all directions. And it must flow in right lines in the same medium, for no reason can be given why it should deviate more to one side than another. Experiments likewise confirm that it moves in right lines.

Cor. 1. *No rays of light are naturally converging; but always diverge.*

For the rays are projected from bodies, or the parts of bodies; whether the light is innate or not; and therefore naturally diverge. When they converge, they are made to do so by art, by means of glasses, as mirrors, lenses, &c.

Cor. 2. *Rays that shew things far distant, fall upon the eye parallel. And to shew things near hand, they diverge from a point; which to cause distinct vision, ought to have a proper distance, as* 6, 8, 12 *inches, &c. or as near as the eye will permit.*

Cor. 3. *And therefore to make an object seem at a great distance; the rays flowing from each point of it ought to be brought parallel to the eye.*

This is to be done by the help of proper glasses; and then art will imitate nature.

Fig.

PROP. VI.

2. *The denſity of rays flowing from an object, or any part of an object; is reciprocally as the ſquare of the diſtance.*

Let the rays flow from A, and fall upon the plane BC; then taking the plane BC away, let the ſame light fall on any other plane DE, which is done by producing the lines AB, AC, to D and E. Then the area of the ſurface BC, is to the area of the ſurface DE; as BC^2 to DE^2; or as AB^2 to AD^2. Let s be any ſmall ſpace, l the quantity of light contained in DAE. Then $BC^2 : s :: l : \frac{ls}{BC^2}$ = the number of rays on the ſpace s, at the diſtance AB. And $DE^2 : s :: l : \frac{ls}{DE^2}$ = number of rays on the ſpace s, at the diſtance AD. And the denſity of light being as the number of rays; it will be, denſity of light at B : denſity of light at D $:: \frac{ls}{BC^2} : \frac{ls}{DE^2} :: DE^2 : BC^2 :: AD^2 : AB^2$.

Cor. 1. *The quantity or intenſity of light, flowing from a luminous object, is reciprocally as the ſquare of the diſtance.*

Cor. 2. *The brightneſs of an object, is the ſame at all diſtances from the eye; if none of the rays be ſtopt by the way.*

For the brightneſs is the ſame, when the ſame quantity of light falls upon the ſame quantity of the retina, in the eye; or when the denſity of light on the retina is the ſame. But the denſity of light falling on the pupil, or the quantity of light falling on it, is reciprocally as the ſquare of the diſtance.

diſtance. And (III. Cor. 3.) the apparent magnitude of the object is reciprocally as the ſquare of the diſtance. Therefore the quantity of light on the pupil, is as the apparent magnitude of the object, that is, as the ſpace taken up on the retina. Therefore the quantity of light being as the ſpace taken up, its denſity is given; and therefore the brightneſs is given, or remains the ſame. Fig. 2.

Cor. 3. *Hence the faintneſs of remote objects is owing to the denſity and opacity of the atmoſphere, which ſtops a great part of the light, in coming to the eye.*

PROP. VII.

If a room be made quite dark, and a ſmall hole in the window ſhut be made. The objects out of the houſe being ſtrongly illuminated; the rays proceeding from them, thro' the hole, will form their pictures on a paper, or on the oppoſite wall, in their proper colours; but in an inverted poſition. 3.

Let PQR be the dark room, F the hole in the window ſhut, ABCD an object without. The rays proceeding from the top A, in the right line AF, will form its image at *a* towards the bottom of the wall. And the rays proceeding from the bottom C, in the line CF, will paint its image at the top *c*. Likewiſe the rays proceeding from the left B, in the line BF, will make the image of B on the right hand at *b*. And thoſe proceeding from the right hand D, in the line DF, will form its image on the left at *d*. Likewiſe all the rays proceeding from the line AC, will form its image *ac*. And thoſe from BD will make its image *bd*. And the like for any other object expoſed to the hole F.

Cor.

Fig. 3. Cor. 1. *If the hole* F *be very small, the pictures will be very distinct, but hardly visible for want of light. And if the hole be large, the pictures will be brighter, but not distinct. To remedy these things, a broad convex lens of a proper focus, must be placed in the hole made wide enough to receive it.*

Cor. 2. *If an object, too near the eye, appear confused; it may be seen clearly thro' a hole made in a piece of paper with a pin, and put close to the eye. Then it will appear distinct, and in its true position.*

This is upon the same principle. For if the hole is small, the rays flowing from all the points of the object, will fall upon as many distinct points of the retina; and make a distinct picture.

Cor. 3. *But if the paper with a small hole in it, be held at a small distance, and a needle held close to the eye, or any way between the eye and the paper; it will appear inverted, and magnified.*

The reason of this is, that the rays crossing one another at the hole, before they come to the object; the picture of the object must be painted the same way that it lies; contrary to the case of the 2d Corol. where the rays crossing one another between the object and the eye, makes the picture inverted. But we know, that a picture inverted in the bottom of the eye, makes the object seem erect; consequently, when the picture is erect in the bottom of the eye, the object will seem inverted.

42. Cor. 4. *From the same principle it follows, that if the sun shines thro' a long narrow slit* AB *in a window shut; its image* CD *at a good distance from the window, will approach to a circle.*

For the cone of rays flowing from all parts of the sun thro' the point A, will be projected into a circle at C; and those flowing thro' B will be projected into a circle at D. And so rays flowing

ing thro' all points between A and B, are project- Fig.
ed into innumerable circles between C and D; 42.
each of these circles is the image of the sun, and all together make up the oblong figure CD. In this figure the extreme circles C, D, grow larger at a greater distance, whilst the distance of their centers remains the same, being equal to AB. So that as the distance increases, the length and breadth of the figure increases equally, and at a great distance, their difference vanishes as to sense. At the place FG, the figure is narrow, having rectilinear sides and circular ends. And after the same manner, if the sun shines thro' a triangular hole or any other figure, the image at a great distance will be nearly circular, and the centers of the extreme circles will form a triangle or other figure, similar and equal to the hole.

Scholium.

An apparatus made after the same manner described in this Prop. is called a *Camera obscura*.

PROP. VIII.

The light of the sun consists of rays differently refrangible.

Ex. 1.

To prove this by experiment. In a very dark 4.
chamber, make a round hole F, about $\frac{1}{4}$ inch diameter, in the window shut EG. Place a glass prism ABC very near the hole; so that a beam of light SF coming in at the hole, may pass thro' the prism and be refracted upwards, towards the opposite wall of the chamber, and there form a coloured image of the sun PT. This prism is triangular at each end, 3 or 4 inch long, and is polished on the 3 sides AB, BC, CA. It is here placed parallel to the horizon, and its axis perpendicular

Fig. 4. dicular to the beam SF. Turn the prism slowly about the axis, and you will see the refracted light on the wall, or the coloured image of the sun, first to descend, and then to ascend. Between the descent and ascent, when the image seems stationary, stop the prism and fix it there. For in that posture the refractions of the light on the two sides CB, CA, are equal to one another.

So likewise in other experiments, when you would have the refractions on both sides the prism to be equal, you must note the place on the wall where the image stands still, between two contrary motions; and make it fast there. In this posture of the prism all the following experiments are to be made, unless some other posture is described. The prism remaining in this posture, let the refracted light fall perpendicularly upon a sheet of white paper at the opposite wall of the chamber, and you'll see the solar image formed on the paper to be oblong, and not oval, but terminated with two rectilineal and parallel sides, and two semicircular ends; the sides bounded pretty distinctly, but the ends very confusedly and indistinctly, the light there decaying, and vanishing by degrees. Here the breadth answers to the sun's diameter; at 18 $\frac{1}{2}$ feet from the prism, the breadth diminished by $\frac{1}{4}$ inch, the diameter of the hole, is 1 $\frac{7}{8}$ inch, and subtends an angle at the prism of half a degree, which is the sun's apparent diameter. The length 10 $\frac{1}{4}$ inches, when the refracting angle of the prism C is 64 degrees. With a less angle of the prism the length of the image will be less. If the prism be turned about its axis, that way which makes the rays emerge more obliquely to the side AC; the image soon becomes an inch or two longer, or more. And if the prism be turned about the contrary way, so as to make the rays fall more obliquely on the side CB, the image soon becomes

comes an inch or two ſhorter. And therefore in trying this experiment, one muſt be as careful as can be, in placing the priſm, ſo that the refractions on both ſides may be alike. Fig. 4.

This experiment tried with a priſm, whoſe refracting angle C is 62 $\frac{1}{2}$ degrees, the length of the image will be 9 $\frac{3}{4}$ or 10 inches, at the ſame diſtance. The magnitude of the hole in the window ſhut, the different thickneſs of the priſm, where the rays paſs thro', the different inclinations of the priſm to the horizon (or different hights of the ſun), make no ſenſible changes in the length of the image. Neither does the different matter of the priſm make any; for in a priſm made of plates of glaſs and water within, there is the ſame reſult.

Alſo the rays always go on in right lines from the priſm to the image. And therefore at their going out of the priſm, have all that inclination to one another, which cauſes the length of the image; that is the inclination of 2 $\frac{1}{2}$ degrees or more. From all which it is plain, the rays falling on P are more refrangible than thoſe falling on T. For if the rays were all alike refrangible, the image PT would be a circle, whoſe length is equal to its breadth; which is eaſily proved thus.

Let SKHP be a ray coming from the lower part of the ſun to the higher part of the image; and refracted by the priſm at K and H, SLIT a ray which comes from the higher part of the ſun, to the lower part of the image, and is refracted at L and I. Suppoſe the refraction on both ſides the priſm, are equal; we have, refraction at K = refraction at I, and refraction at H = refraction at L. Then by addition, the refractions at K and H = refractions at I and L. And therefore the two rays being equally refracted, have the ſame inclination to one another after refraction as before; that is, half a degree, equal to the ſun's apparent diameter.

Fig. 4. diameter. So then PT would ſubtend an angle at the priſm of half a degree, and therefore would be equal to the breadth, and conſequently the image would be round. But inſtead of that, it is five times longer than it is broad.

Likewiſe the image PT is coloured; for from T to P it has theſe different colours in this order, red, orange, yellow, green, blue, purple, violet; at the places, *r*, *o*, *y*, *g*, *b*, *p*, *v*, reſpectively. So that the moſt refracted part at P is violet, and the leaſt refracted at T is red. And the intermediate part, all the other colours.

Exp. 2. When a beam of light is let in at the hole F, of the window ſhut; hold the priſm in ſuch a poſition that its axis may be perp. to the beam. Then look thro' the priſm to the hole, and turning the priſm about back and forward, to find when the image is ſtationary; there ſtop the priſm, the refraction on both ſides being then equal. Then looking thro' it, at the hole; the length of the image will appear to be many times greater than the breadth. The moſt refracted part being violet; and the leaſt refracted, red. The middle parts blue, green, yellow in order.

And if the priſm be removed out of the ſun-beam, and then looking thro' it at the hole; you will have the ſame appearance. Now if all the rays were refracted alike, the hole would appear round when refracted thro' the priſm. So that at equal incidencies there is a conſiderable inequality of refraction.

5. *Exp.* 3. To try what is the effect of refracting the rays a ſecond time. Things being ordered as in the firſt experiment, place a ſecond priſm cloſe by the firſt in a croſs poſition as DH, that it may again refract the beam which comes thro' the firſt priſm. The firſt priſm refracts it upwards; and the ſecond, ſideways. By the firſt priſm alone the beam

beam is refracted to PT, and *qt* is the image made by the refraction of the two croſs priſms together. Fig. 5. Then it will appear by the refraction of the ſecond priſm that the breadth of the image is not increaſed, but the upper part P ſuffered a greater refraction in both priſms, and the lower part T, a leſs refraction in both priſms; and that without any dilatation of the image in breadth. Likewiſe as before, the upper part *q* appears violet; and the lower part *t*, red; and the reſt as before. So that here is no dilatation or ſplitting of rays.

And if a third and even a fourth priſm be placed in the ſame manner after the ſecond, the reſult will be the ſame; and the moſt refrangible rays will be moſt refracted, as before; and the leaſt, the leaſt refracted, whilſt their colours remain unchanged.

Exp. 4. If inſtead of one hole in the window, 6. there be made two holes, under one another, at a ſmall diſtance; and refracting the light upwards by two parallel priſms, placed one at each hole; and then refract the two images to the oppoſite wall, in ſuch manner that the two coloured images may be joined end to end in a right line. Then if both theſe refracted beams were again refracted ſideways by a third priſm placed acroſs the two firſt (as in Exp. 3.). Then the two beams would be refracted to the places *pt*, *mn*; which would not now lie in one right line with their ends touching as before; but be ſeparated and become parallel. The blue ends *m*, *p* being by a greater refraction tranſlated further from its former place, than the red ends *n*, *t*. And the ſame happens if the third priſm be placed at a good diſtance from the others.

Exp. 5. If a beam of light be reflected by one ſide of a priſm, and then refracted by another priſm, ſome of the rays will be more refracted, and others leſs. Or if it paſſes thro' one ſide of a priſm,

Fig. 6. a prism, and is reflected by another side, and made to pass thro' the third side; and after this be refracted by another prism; some rays will at last be more refracted than others. Or if a beam pass thro' parallel surfaces of glass, and be then refracted; the consequence will still be the same. And therefore it is fully proved, that the sun's light consists of rays differently refrangible.

4. *Exp.* 6. Let a small hole be made in the paper where the image PT is; and let each of the colours pass successively thro' this hole; and be refracted again by a prism behind the hole. Then each of these colours will be found to continue the same as before without any manner of alteration. And the figure or spot of light on the wall, will, as to sense, be circular. So that none of these colours are the least changed by refraction. Likewise if small bodies be placed in this new light, they will appear of the same colour as that light, red in the red light, green in the green light, &c. So that the colours are no way changed by reflexion. Likewise if you look at any of these spots of new light upon the wall, thro' a prism, they will appear wholly of the same colour, and no way dilated or expanded in length. So that homogeneal light suffers no manner of alteration in any case. And in all these trials it will appear that those rays, which were most refracted at first, are always afterwards most refracted. And those that are least at first, are always least afterwards.

Cor. 1. *Every ray of light has a peculiar degree of refrangibility, which cannot be changed by any reflexions or refractions; but remains constantly and invariably the same.*

Cor. 2. *The confused vision of any object seen thro' a refracting body or medium, arises from the different refraction of the light.*

For

For different rays flowing from the ſame point of an object, will be refracted to different points on the retina at the bottom of the eye. Fig.

Cor. 3. *The light reflected or emitted from all bodies, conſiſts of rays differently refrangible.*

For the light reflected from all bodies on the earth, is the ſun's light. And beſides, if one looks at any object thro' a priſm, that object will appear tinged with colours. Take a ſmall part of a body, illuminate it ſtrongly, and looking at it thro' a priſm, you'll have an oblong image like PT (*fig.* 4.) with all the colours. In like manner, a ſtar, a lamp, a candle, a burning coal, red hot iron, or any burning matter ſeen thro' a priſm, gives the ſame appearance.

Cor. 4. *Hence alſo the ſimple primary colours are ſeven; red, orange, yellow, green, blue, purple, violet. The red being leaſt refracted, and ſo in order to the violet, which is moſt. And the ſpaces taken up by theſe, are not equal; the orange and purple being little more than half each of the reſt, which are nearly equal.* 4.

This is known by meaſuring the parts of the image PT.

Cor. 5. *Hence objects ſeen thro' glaſſes in purified or homogeneal light will appear diſtinct; but very confuſed in heterogeneal or common light.*

This is plain from the 3d experiment; and may be further evinced by placing flies, or the letters of a book, or any minute objects in homogeneal light, where they will be perfectly ſeen, and their parts diſtinctly defined; but will appear confuſed in common light, and their ſmall parts cannot be diſtinguiſhed therein.

Fig.

SCHOLIUM.

Sir J. Newton, by accurately measuring the spaces, that the several colours take up, found them as follows;

red,	orange,	yellow,	green,	blue,	indigo,	violet.
$\frac{1}{8}$,	$\frac{3}{40}$,	$\frac{2}{15}$,	$\frac{1}{6}$,	$\frac{1}{6}$,	$\frac{1}{9}$,	$\frac{2}{9}$.

Where the whole length of the image is 1.

PROP. IX.

Rays of light which differ in colour, differ also in degrees of refrangibility.

7. *Exper.* 1. Take an oblong piece of paper DGI, draw a line cross it in the middle, to divide it into two equal parts. Paint one end DG with blue, the other GI with red, as strong as you can. Lay it flat where there is light enough; look at it thro' a glass prism, held parallel to it, and to the horizon; then if the refracting angle of the prism be upwards, so that the paper may seem to be lifted upwards by refraction; the blue half FO will be lifted higher by refraction, than the red half OK. But if the refracting angle of the prism be turned downwards, so that the paper may seem to be carried lower by refraction; its blue half will be carried lower than the red half. Therefore the light from the blue is more refracted, and therefore is more refrangible, than the light from the red.

Exp. 2. Take the same paper, whose two halves are painted with red and blue, and lap a thread of black silk several times about it, so that the parts of it may appear upon the colours like so many black lines drawn over them. Set this paper perpendicular against a wall in a dark room, or in the night; so that one of the colours may stand to the right, and the other to the left. Place a candle near

near the paper to illuminate it ſtrongly. Then take a lens of a large focal diſtance, and place it at ſuch a diſtance, that the rays coming from the ſeveral points of the paper may be collected to a focus, at about the ſame diſtance on the other hand; and ſo form the image of the coloured paper upon a white paper placed there. Then moving the paper to and from the lens, to find where the images of the blue and red parts of the paper appear moſt diſtinct; which is eaſily known by the images of the black threads of ſilk, which will be diſtinct there; and you'll find where the red half of the paper appears diſtinct, the blue half will appear confuſed; ſo that the black lines on it can ſcarce be ſeen. And on the contrary, where the blue half appears diſtinct, the red half will be confuſed, ſo that its black lines can ſcarce be ſeen. And therefore between theſe two places, where theſe ſeveral images appear diſtinct, there will be a remarkable diſtance, which will be about an inch and a half, if the diſtance of the candle or paper from the lens be about ſix feet. Therefore the focal diſtance of the red being greater, than that of the blue; proves the blue rays to be more refrangible than the red. Therefore rays that differ in colour, differ alſo in their degrees of refrangibility. The ſame appears by the experiments in the laſt Prop. Fig. 7.

Note, A lens is a ſolid piece of glaſs, the two ſides being the ſegments of ſpheres, and poliſhed.

Cor. 1. *Hence all light naturally conſiſts of heterogeneous rays, which exhibit different colours.*

Cor. 2. *Every ſort of homogeneal rays produces its proper colour, according to its degree of refrangibility. And thoſe that agree in colour, agree in the degree of refrangibility; and its colour cannot be changed by any reflexions or refractions.*

Fig. 7. Cor. 3. *There are as many simple colours as there are degrees of refrangibility, and therefore an infinite number.*

For tho' in Exp. 1. Prop. VIII. there are only seven simple colours mentioned; yet each of them consists of an infinite number of degrees, and therefore are infinitely various.

Cor. 4. *The perfection of telescopes and microscopes is prevented by the different refrangibility of the rays of light.*

This appears by the 2d experiment; for these instruments are composed of lenses of several sorts. No rays issuing from a point can be refracted exactly to a single point.

Cor. 5. *Hence it is plain, if the sun's light consisted but of one sort of rays; there would be but one colour in the whole world, or all things would be of one colour. Nor would it be possible to produce any new colour by reflexion or refraction. And of consequence the variety of colours depends upon the composition of light.*

SCHOLIUM.

4. If a large hole F be made in the window shut EG, and the prism ABC placed near it, and close to the prism on the other side, a thin board DO, with a small hole in it; and at 12 feet distance, the board MN be placed, having a small hole in the middle of it; and close behind it, the prism RQ. Then if the prism ABC be turned slowly to and fro about its axis, the image PT will move up and down on the board MN; and by this means, all the several parts of it may be made to pass thro' the hole in it. And each of these passing thro', is refracted again by the prism RQ, and so passes to the opposite wall. Then it will appear, that the light which is most refracted at ABC, is also most refracted

refracted at RQ, and goes to the higher part of the wall at X. And the light which is leaſt refracted at ABC, is alſo the leaſt refracted at RQ, and goes to the lower part of the wall at Y. And that the moſt refracted at X is violet, and the leaſt refracted at Y is red. And all this happens, whilſt the two boards and the priſm RQ remain unmoved; by which means the incidence of the rays upon the ſecond priſm, remains always the ſame. Therefore at the ſame incidence, ſome rays are more refracted than others; and thoſe that are more refracted at firſt, are more refracted afterwards, and have always the ſame colour annext; and the like for the reſt. So that it is evident, that thoſe rays that are endued with different colours, have different degrees of refraction. From the perſpicuity and evidence of this experiment, it is called the *Experimentum crucis.* Fig. 4.

PROP. X.

All rays of light falling on a reflecting ſurface, in the ſame angle; are reflected in equal angles, if they be reflected at all.

Exper. Let F be a hole in the window ſhut, G a reflecting ſurface placed horizontally. Let a beam of light from the ſun FG, come thro' the hole F, and fall upon the reflecting ſurface G, and then be reflected to H on the oppoſite wall; the figure of the reflected light at H will be circular like the hole F. And therefore there is no ſeparation of the rays as in refraction. And no colours are brought by reflexion. 8.

Alſo if a paper be held any way between G and H parallel to the wall at H; the image received upon the paper will always be ſimilar to the image at H, and of a circular form. And therefore the rays that had the ſame incidence, will run parallel

Fig. 8. to one another after reflexion; and consequently are reflected at equal angles.

Indeed the Beam FG grows wider as it is further from F, and GH grows bigger as it is further from G; but this is only owing to the apparent magnitude of the sun's diameter. For from any one point of the sun's disc, the rays which fall parallel on G, will be reflected parallel to H.

9. Cor. *Hence there is no separation of the rays of light by reflexion, any thing like what there is by refraction.*

Indeed the most refrangible rays will be the soonest reflected, if they move out of a dense medium into a rare one; as suppose a beam of heterogeneous light moves in direction FG; some of it is refracted along GD, and some along GC. Therefore if the angle FGA be diminished; the way of the most refrangible rays, GC, will come to GB, and be reflected along GH. But this is nothing to the present Prop. For it is reflected, because it is impossible it can be refracted any longer, as it cannot enter the medium; and in this sense, the most refrangible rays are the most reflexible.

PROP. XI.

Whiteness, or the sun's light, is compounded of all the primary colours mixed in a due proportion.

4. *Exp.* 1. A beam of light being refracted by a prism, as in Ex. 1. Prop. VIII, and made to form the image P on a piece of paper. Take away the paper, and hold a lens in the refracted rays, so as they may all fall upon it. This will cause the coloured light, which diverged from the prism to converge, and meet again at its focus. If you hold a paper behind the lens, the solar image will appear upon it intensely coloured; and that by receding

ceding from the lens, thoſe colours will come more and more towards one another; and by mixing together, will more and more dilute one another continually; till at length the paper comes to the focus, where by a perfect mixture, all the colours will wholly vaniſh, and be converted into whiteneſs; the whole light appearing now upon the paper, like a little white circle. And afterwards by moving farther from the lens, the rays which converged and met at the focus, will now croſs one another there, and diverge from thence, and thereby make the colours to appear again, but in a contrary order, the red being now above, and the violet below. Here then the ſun beam SF, which at firſt was white, is by the refraction of the priſm ABC reſolved into its original colours; theſe colours, by the refraction of the lens, are again intimately mixt, and reduced to their original whiteneſs. Fig. 4.

Now it is evident this whiteneſs is made up of all the colours of the image. For if any of the colours be ſtopt at the lens, the whiteneſs will ceaſe, and degenerate into that colour which is made by the compoſition of the remaining colours. And if the intercepted colour be then let paſs, and fall upon that compound colour, it will immediately reſtore its whiteneſs by mixing with them. Thus if the blue rays be intercepted, the reſt will appear reddiſh, and then letting the blue paſs, the whiteneſs is reſtored. And if the red be ſtopt, the reſt will appear blueiſh; and letting the red paſs, the whiteneſs is again reſtored.

And in making this white, the ſeveral rays do not ſuffer any change by acting upon one another. For if the paper be held beyond the focus, and the red colour be ſtopt and then let paſs again, the violet colour on the paper ſuffers no change. Neither

Fig. 4. ther will the red be changed by ſtopping and letting paſs the violet.

When the paper is held in the focus, and the white image there be viewed thro' a priſm, you'll have a coloured image like PT. And if any colour at the lens be ſtopt and let paſs by turns, it will diſappear and return as often; but the remaining colours will not ſuffer any change. One colour then depends on one ſort of rays, and another colour, on another ſort.

10. *Exp.* 2. Make an inſtrument XY in faſhion of a comb, whoſe teeth are $1\frac{1}{2}$ inch broad, and diſtance two inches; and interpoſing ſucceſſively the teeth of this inſtrument near the lens MN, placed as in the laſt experiment, you will ſtop part of the colours by the teeth, whilſt the reſt go on, thro' the ſpaces between the teeth, to the paper DE, in the focus, where it makes a round image. This image appears white, when the comb is taken away; but the comb being interpoſed, the whiteneſs changes its colour to that which goes on thro' the comb. And the colour is perpetually ſo varied by the motion of the comb up and down, that in paſſing of all the teeth over the lens, the colours red, yellow, green, blue, purple, do always ſucceed one another, when the motion is ſlow. But if the comb be moved very quick, that the colours by their quick ſucceſſion cannot be diſtinguiſhed from one another, the appearance of the ſingle colours ceaſes, and from a confuſion of them all, there ariſes one uniform white colour. Therefore of the whole light which now appears white, by the mixture of all the colours, there is no part really white. One part is red, another is yellow, a third green, a fourth blue, a fifth purple. If the impreſſions of theſe ſeveral colours follow one another ſlowly, ſo that they may be ſeverally perceived, there

there is made a diſtinct ſenſation of all the colours ſucceſſively. But if the impreſſions follow one another ſo quickly, that they cannot be ſeverally perceived, there ariſes out of them all one common ſenſation, which is neither of this nor that colour, but is indifferent to them all; and this gives a ſenſation of whiteneſs. Therefore when all the colours are viewed perfectly mixt in the focus of the lens, this will much more ſtir up a ſenſation of whiteneſs. Fig. 10.

Exp. 3. A beam of light being refracted by a priſm ABC, and the ſun's coloured image PT made to fall on the oppoſite wall. If a ſpectator ſtand at FG, and place another priſm cloſe by ABC, and in the ſame poſition, and look thro' it to the image PT; then the colours of it will appear to be contracted into a round ſpot perfectly white. Which therefore is made ſo by the mixture of all the colours together. 4.

Exp. 4. Take a large circle or wheel ADF. Divide its circumference into 12 equal parts; ſet two of them from A to B; that is, make AB two of them, BC 1, CD 2, DE 2, EF 1, FG 2, GA 2. Draw lines to the center O. Then paint it, making DOE red, EOF orange, FOG yellow, GOA green, AOB blue, BOC purple, and COD violet; all of as bright colours as can be had. Then put an axis thro' the center O, and cauſe the wheel to revolve ſwiftly about its axis; and none of the colours will then appear ſingly; but the whole will appear to be white. And this white will be the fuller, as the particular colours are the brighter. 11.

Exp. 5. Whiteneſs may be made by mixing coloured powders together. Thus, put together orpiment, a purple powder, biſe, and verdigreaſe, theſe being mixt well together, will compound a white colour; the quantities of them muſt be found out by trials, and leſs or more of each muſt be taken,

Fig. taken, according to their brightneſs or dullneſs. But all powders of this kind, loſe or ſtifle a great deal of the light that falls upon them; and therefore a white cannot be made bright enough of theſe, but will appear duſky; to help this, it muſt be placed in a ſtrong light, and viewed at a diſtance. From all theſe experiments it appears, that whiteneſs is a due mixture of all other colours.

Cor. 1. *A mixture of colours may be made which ſhall be like the colour of homogeneal light. But it will differ in this, that the parts of it will be differently refrangible.*

For almoſt any of the priſmatic colours may be imitated by mixing the colours on each ſide. Thus red and yellow make an orange. Orange and green make a ſort of yellow. Yellow and blue make a green. Green and purple make a blueiſh colour. And blue and violet make a purple.

Cor. 2. *Hence one may know how to make a mixture of colours, that ſhall be like the colour of a given object.*

Look at the object thro' a priſm, to ſee the oblong coloured image of it, which divides the colour of it into all the ſimple colours it is compoſed of. Take ſuch a quantity of every ſeparate colour, you ſee in the image, as ſhall be proportional to its intenſity or degree of brightneſs. And ſuch as are faint or hardly appear, may be omitted. Then mix them together.

Cor. 3. *All colours in the world are either the colours of homogeneal light; or compounded of them.*

This is evident from this and the foregoing Propoſitions.

Cor. 4. *A body that reflects no colour, is black.*

Cor.

Cor. 5. *Hence black is no colour, and white is all colours.* Fig.

PROP. XII.

If any body be placed in ſimple or homogeneal light of any colour; it will appear of the ſame colour.

Exp. 1. Suppoſe the beam of light SF to paſs thro' the hole F, in the window ſhut, and being refracted by the priſm ABC, to caſt the image PT on the oppoſite wall, and to form all the original priſmatic colours. Take a bit of paper, and hold in the red light, and it will appear red. Hold it in the orange, yellow, green, blue, &c. ſucceſſively, and it will appear orange, yellow, green, blue, &c. ſucceſſively. 4.

Take a bit of coloured paper, and hold it in the red light, and it will appear red; alſo hold it in the orange, yellow, green, &c. and it will appear orange, yellow, green, &c. reſpectively. But it will appear moſt luminous when placed in the light of its own kind. The room muſt be dark in trying this experiment, as well as in the following.

Exp. 2. The ſame apparatus continuing. Take *cinnabar*, and place it in the yellow light, and it appears yellow; place it in the blue light and it appears blue, &c. But place it in the red light, and it is moſt luminous, this is its native colour. *Indigo* placed in the red light is red, in the orange it is orange, in the green it is green, &c. and placed in the purple, its own natural light, and it is a moſt reſplendent purple; and its ſplendor gradually diminiſhes, by moving it by degrees thro' the green and yellow to the red. Place a bit of blue ribbon in the red light it appears red; and in the orange, yellow, green, it appears orange, yellow, or green, but faint. Place it in the blue light, and it is a moſt bright blue.

Exp.

Fig. 4. *Exp.* 3. The ſame things remaining. If *cinnabar* and *ultra marine* be held together in the red light; they will both appear red. But the cinnabar will appear of a ſtrong luminous reſplendent red; and the ultra marine of a faint obſcure and dark red. And if they be held together in the blue light, they will both appear blue; but the ultra marine will appear of a ſtrong luminous and reſplendent blue; and the cinnabar of a faint and dark blue. So that the cinnabar reflects the red light much more copiouſly than the ultra marine does; and the ultra marine reflects the blue light much more copiouſly than the cinnabar doth. The ſame may be tried with other bodies.

Cor. 1. *The colours of all bodies ariſe from hence, that ſome bodies reflect one ſort of rays, others another ſort of rays, more copiouſly than the reſt. And they become coloured, by reflecting the light of their own colours more plentifully, and that of all other colours more ſparingly.*

That this is the only reaſon of their colours, appears from theſe experiments; and further from this conſideration, that the colour of homogeneal light cannot be changed by the reflexion of natural bodies. And therefore they cannot appear coloured by any other means than by reflecting the light of their own colour.

Cor. 2. *'Tis light only that gives colour to bodies; and they have naturally no colour in themſelves.*

For a body cannot be ſeen in the dark, when there is no light. For there is nothing in the body but a diſpoſition to reflect this or that ſort of rays, which makes them be ſaid to be of that colour. And the rays properly ſpeaking are not endued with colours; for in them there is nothing but a certain power or diſpoſition to excite a ſenſation of this or that colour in the brain.

Cor.

Cor. 3. *Liquors that reflect any colour, transmit the other sorts.* Fig. 4.

For instance, a liquor that reflects the blue light, imbibes the red, which will pass thro' it, if the vessel is not too broad. And if there be two liquors a red and a blue; tho' either liquor be transparent apart, yet you'll not be able to see thro' both together. For if only the red rays pass thro' one, and only the blue thro' the other; no rays can pass thro' both. Now if bodies become coloured by reflecting, or transmitting this or that sort of rays more copiously than the rest; it must be conceived, that they stop and stifle within themselves the rays which they do not reflect or transmit.

Colour of liquors varies with their thickness. Thus a red liquor in a conical glass, looks of a pale yellow at bottom; a little higher it grows orange; higher still it becomes red; and where the red is deepest, the glass is broadest. And higher it will transmit no rays; they being all lost by degrees in the body of the liquor. And thence it appears that red is the strongest light, and will penetrate farthest into a fluid. And this is evident by the observations of those that dive into the sea; for the objects look the redder the deeper one goes; the other rays being reflected back.

Cor. 4. *Hence the red rays are the strongest, are least turned out of their way, and penetrate farthest into a resisting medium. And the rest of the colours are weaker and weaker in their order; the violet being the weakest.*

Cor. 5. *We can make a body to be of any colour we please, by holding it in the light of that colour.*

PROP.

Fig.

PROP. XIII.

The colours of natural bodies depend upon the size and density of the compounding particles.

12. *Exper.* 1. Take two object glasses belonging to two long telescopes, one a plano convex, the other a double convex. Lay the plane side of one AEB, upon the convex side of the other CED. Then looking perpendicularly upon them, you'll see a black spot in the middle where they touch; and several concentric rings of colours about it, at Z, F, G, H, I, A, &c. These rings may be reckoned of several orders, by reason of the same colour coming over again. These orders are as follows, 1. Z, black, blue, white, yellow, red. 2. F, violet, blue, green, yellow, red. 3. G, purple, blue, green, yellow, red. 4. H, green, red. 5. I, greenish blue, red, &c. Which colours grow weaker and weaker from the center; and also narrower and narrower.

But if the light be made to pass thro' the glasses to the eye, the spot in the middle will be white; and the orders of colours, going from the center, quite contrary to the others. 1. White, yellowish red. 2. Black, violet, blue, white, yellow, red. 3. Violet, blue, green, yellow, red, &c. The black lines between the glasses, at, F, G, H, I, A, are distances in arithmetical progression, being the places where the same colour returns, by reflected light, as at the first trial.

Measuring the diameters of the rings in the brightest part, their squares are found to be in arithmetical progression of the odd numbers 1, 3, 5, 7, 9, 11, &c. And since one of the glasses was plane and the other spherical; their distances at these rings, that is, at Z, F, G, H, &c. must be

be in the ſame progreſſion. Alſo meaſuring the diameters of the faint rings, in the middle between the bright ones; their ſquares, and conſequently the diſtances of the glaſſes there, appear to be in the arithmetical progreſſion of the even numbers, 2, 4, 6, 8, 10, 12, &c. And from the known radius of the lower glaſs, the diameter of any ring may be computed, and conſequently the diſtance of the glaſſes in that place. And hence the diſtance of the glaſſes in the middle of the firſt dark ring, was found to be $\frac{1}{89000}$ part of an inch. And half of it multiplied by 1, 3, 5, 7, &c. gives the diſtance of the glaſſes or the thickneſs of the included air, at the moſt luminous parts of all the bright rings, $\frac{1}{178000}$, $\frac{3}{178000}$, $\frac{5}{178000}$, $\frac{7}{178000}$, &c. and $\frac{2}{178000}$, $\frac{4}{178000}$, $\frac{6}{178000}$, &c. the thickneſs at the darkeſt parts. Fig. 12.

Exp. 2. Wetting the objects with water; as the water crept in between them, the circular rings grew leſs. And by meaſuring their diameters, and from thence finding the diſtances of the glaſſes, theſe diſtances are found leſs than before in proportion as 3 to 4; that is, as the ſines of refraction out of water into air.

Exp. 3. Viewing theſe rings of colours in a dark room, in homogeneal light, they become more diſtinct. And trying all the priſmatic colours ſucceſſively, the red circles will appear to be bigger than the blue or violet. The diſtances of the glaſſes, at the red and violet circles, are as $14\frac{1}{4}$ to 9. Theſe rings were not now of various colours, but appeared only of that priſmatic colour, with which they were illuminated. And the light which fell on the deep ſpaces between the coloured rings, was tranſmitted

Fig. 12. mitted thro' the glasses without any variation of colour. From hence the origin of these rings is manifest; viz. That the air between the glasses, according to its various thickness, is disposed in some places to reflect, and in others to transmit the light of any one colour; and in the same place, to reflect that of one, where it transmits that of another.

The diameter of the 6th circle made by the yellow was $\frac{58}{100}$ of an inch.

Exp. 4. If a little soap be agitated in water till it dissolve, and a bubble of this water blown up, and covered with a glass, to keep it from the air. You'll observe the bubble grow thin at the top, by the continual descent of the water. The bubble at last will grow so thin at top, as to transmit the light and appear black. Then observing the bubble by reflected light from the sky, the black spot will be encompassed with the same coloured circles, and in the same order, as in the first experiment. As the water descends, and the bubble grows thinner, the rings continually grow bigger till the bubble bursts.

If the bubble be viewed by light transmitted thro' it, all the colours will be contrary. Therefore it appears that altering the thickness of a very thin plate, the colour is altered.

Exp. 5. Take very thin plates of isinglass, talk, or muscovy glass, that show the colours; then by wetting these plates, the colours remain the same as before, only they become more faint and languid, especially when wet on the under side. Therefore the thickness of the plate to produce any colour, depends only on the density of the plate, and not on the density of the inclosing medium. But the colours are more vivid as their densities are different.

Exp. 6. Two object glasses being laid on one another as in experiment 1. If a spectator looks obliquely

obliquely at them, the rings of colours will be increased in bigness. Hence the colour of some plates will change by changing the position of the eye. Fig.

From all these experiments it is plain, that the colours of bodies, depend upon the thickness and density of the particles that compose them.

Cor. 1. *Hence if the density or size of the particles in the surface of a body be changed; the colour is likewise changed.*

Cor. 2. *When the thickness of the particles of a body is such, that one sort of light or colour is reflected; another light or other colours will be transmitted. And therefore the body will appear of the first colour.*

This appears by Exper. 1. where the transmitted light is different from the reflected light.

Cor. 3. *The thickness of a plate of air, between two glasses, which reflects a deep yellow; must be* $\frac{1}{178000}$, or $\frac{3}{178000}$, or $\frac{5}{178000}$, &c. *parts of an inch. And that of a plate of water between two glasses, will be* $\frac{3}{4}$ *of it.*

This is plain by the 1st experiment, for the thickness of the plates of air; and by the 2d, for those of water.

Cor. 4. *The thickness of any plate reflecting red, is to the thickness of the same plate reflecting violet; as* 19 *to* 12.

For by Exp. 3. they were as $14\frac{1}{4}$ to 9.

Cor. 5. *Hence the thickness of a plate may be such, that it will reflect different colours.*

If r, v, be the thicknesses of plates that reflect red and violet. Then (Cor. 4.) $12r$ and $19v$ will be thicknesses of plates that reflect both.

Fig. Cor. 6. *The parts of bodies and their pores, must not be less than a certain bigness to make them coloured.*

For if a particle be thinner than $\frac{1}{178000}$ part of an inch, it can reflect no yellow (by Cor. 3.) and the like for others. In which cases the light will be transmitted, and the body be transparent.

Cor. 7. *The particles of bodies reflect rays of one colour, and transmit those of another. And this is the ground of all their colours.*

This appears from experiment the first.

Cor. 8. *The bigness of the compounding particles of natural bodies may be conjectured by their colours.*

We are let into this by Exp. 1. And from hence a table may be made of the several orders of colours, to form our judgment by. Such a table you'll find in Sir J. Newton's Optics, pag. 206.

Cor. 9. *The cause of reflection, is not the impinging of light on the solid parts of bodies. But it is done by a certain power, uniformly diffused over the whole surface of the reflecting body.*

For in passing of light out of glass into air, there is a reflexion as strong as out of air into glass, or stronger; and far stronger out of glass into water. And air is not likely to have stronger reflecting parts than water, or glass. And the reflexion is as strong or stronger in vacuo.

Again, if light passing out of glass into air, fall at a greater angle than 40 or 41 degrees, it is all reflected, if more perpendicular it is transmitted. Now it is not to be imagined, that light at one angle of incidence should meet with pores enow to transmit it; and at another incidence little different, should meet with nothing but parts to reflect it.

Like-

Likewise in the passing of light out of glass into air; at a certain incidence the blue is reflected, and the red transmitted. Fig.

Again, where the glasses touch, there is no sensible reflexion.

Likewise at particular thickness of plates, which are in arithmetic progression, there is no reflection but a transmission.

Lastly the small protuberances, left after polishing, being innumerable and infinitely small; would throw the light in all directions. All these things shew, that the reflexion is not caused by impinging.

Cor. 10. *Bodies reflect and refract light by one and the same power.*

For when light goes out of glass into air, as oblique as it can; if its incidence be made more oblique, it is totally reflected.

Again experience shews, that light is alternately reflected and transmitted, by thin plates of glass for many successions, according to the thickness of the glass.

Likewise those bodies that have the greatest refracting power, reflect the greatest quantity of light.

PROP. XIV.

Every ray of light in its passage thro' any refracting surface, is put into a certain transient constitution or state, which in the progress of the ray returns at equal intervals; and disposes the ray at every return, to be transmitted, and between the returns to be reflected by it.

This is manifest by Exper. 1, 2, and 3d. By these experiments it appears, that one and the same sort of rays at equal angles of incidence, on any thin transparent plate, is alternately reflected and

Fig. transmitted; according as the plate increases in progression of the numbers 0, 1, 2, 3, 4, &c. so that at the thickness 1, 3, 5, 7, &c. the rays are reflected; and at the thicknesses 2, 4, 6, 8, &c. they are transmitted; and thereby make the rings of light. And this (by Exp. 5.) depends on both the surfaces of the glass.

Cor. 1. *The reason why the surfaces of bodies reflect part of the light falling on them, and transmit the rest, is because some rays at their incidence, are in fits of easy reflexion, and others in fits of easy transmission: calling the returns of these dispositions of the rays, the fits of easy reflexion or transmission.*

This appears from the several rings of colours, made by the object glasses; and far more of them are visible thro' a prism, and always where the plates are of the thickness 1, 2, 3, 4, &c. so that they return in equal times.

Cor. 2. *Those surfaces which refract the rays most strongly in fits of easy refraction; do reflect them most strongly in fits of easy reflexion.*

This follows from the foregoing, and Cor. 9 and 10, of the last Prop.

Cor. 3. *When rays of a deep yellow pass perp. out of any medium into air; the interval of the fits of easy reflexion are the* $\frac{1}{89000}$ *th part of an inch. And of the same length are the fits of easy transmission.*

From Exp. 1. of Prop. XIII.

Cor. 4. *When a plate is thinner than* $\frac{1}{178000}$, *the rays are all transmitted.*

This appears from the black spot, Ex. 1. Prop. XIII.

Cor.

Cor. 5. *The intervals of the fits are shortest in the most refrangible rays.* Fig.

By Exp. 3. Prop. XIII.

Cor. 6. *All bodies appear transparent, whose particles and pores are too small to cause any reflexions.*

Cor. 7. *The opacity of bodies arises from the multitude of reflexions within them.*

Cor. 8. *The parts of bodies on which their colours depend, are denser than the medium included in the pores.*

For where the thin body is rarer than the ambient medium, the obliquity of the rays causes the colour to change, so that at any obliquity all sorts of rays will be reflected, which cause a whiteness. But if the thin body be much denser, the colours are little changed by the obliquity, and so the colour will appear.

Cor. 9. *The constituent parts of bodies are the greatest whose colours are most dilute.*

For then it indicates a higher order of the colours, as being more mixt, according to Exp. 1. Prop. XIII. where the farther you recede from the center, the more dilute and mixt these rings are. And a table may be made therefrom in order to judge by. Such a table you have in Sir J. Newton's Optics, pag. 206.

Cor. 10. *A body becomes transparent, by filling the pores of it, with a fluid of the same density with itself.*

For all the parts being of equal density, there can be no refraction within it, and therefore the rays will go strait forward and pass thro' it.

Fig.

PROP. XV.

If a beam of light passes into any transparent body, as glass; part of it will be reflected at its going in, and the rest transmitted to the further surface, where some is transmitted there, and some reflected back to the first surface. And so a quantity of light will be continually reflected back and forward within it, for a vast number of times till it be all lost. Whilst at every point of incidence there is a part transmitted into the air.

Take a glass speculum, ground concave on one side, and convex on the other, and quicksilvered on the convex side. And let a beam of light, coming thro' a small hole in the window shut in a dark room, fall upon the speculum. Then hold a paper at the center of the glass, so that the beam of light may pass thro' a little hole made in the middle of the paper, to the speculum, and so be reflected back to the hole. Then you'll observe several concentric rings of colours round the hole; like these before in the object glasses by transmitted light. These rings grow fainter as they grow larger. Measuring the diameters of these rings, they are in the same proportion as those transmitted thro' object glasses. Viewing them with homogeneal light, they appear more distinct, and to a greater number. The red are the largest, the violet least, and so in order. Placing the eye where the rings appear plainest; the speculum will be seen tinged all over with waves of colours. From all these things, it is plain, these rings are made by the light reflected back and forwards within the glass; whilst some, being in the fits of easy reflexion, and some in the fits of easy transmission, caused these rings of colours. When the quick-

silver

ſilver was rubbed off the glaſs, there would be the ſame rings but fainter; and therefore the quick-ſilver only increaſes the light of the colours, by increaſing the reflexion. A metal ſpeculum tried, produced no colours; and therefore the colours depend on both ſurfaces of the glaſs, and the thickneſs between them. From what has been ſaid it is evident, that light undergoes many reflexions in ſucceſſion within a body, and many refractions out of it for many viciſſitudes. Fig.

Cor. 1. *The outward ſurfaces of glaſſes not only reflect and refract incident light, in a regular manner; but ſcatters a part of it in all manner of directions.*

That light is ſcattered from glaſſes in all directions; is evident from this, that the glaſſes can be ſeen in all directions; and therefore the light reflected from them, enters the eye, let it be placed where it will.

Cor. 2. *Hence the image of a candle may be ſeen in a glaſs, repeated a great many times; till by the weakneſs of the light it vaniſhes.*

PROP. XVI.

Bodies act upon light at ſmall diſtances, by attraction and repulſion.

Exper. 1. Make a hole with a pin in a thin piece of lead; and placing it in the hole of a window ſhut, let a beam of the ſun's light paſs thro' it, into a dark room. Then will the ſhadows of hairs, threads, pins, ſtraws, &c. be bigger than they would be, if the rays of light paſſed by them in right lines. And it is the ſame thing, whether the ſmall body be encompaſſed with air or water, &c.

Fig. The ſhadows of ſcratches in glaſs, and the veins in it, are broader than they ought to be.

13. Let X be a hair placed in the beam; ADG, BEH, KNQ, LOR, rays of light paſſing by the ſides of it, bent at X, and falling upon the paper GQ. TI, VS, the direct light. The light paſſing neareſt the hair, as at D and N, is the moſt bent, paſſing to G and Q, the fartheſt aſunder; thoſe that are further off, as at E and O, are leſs bent; and ſo on, to TI and VS. Therefore the force acting upon the light is ſtrongeſt at the leaſt diſtance, making the ſhadow GQ; and weaker at greater diſtances.

Exp. 2. The ſhadow of all ſorts of bodies are bordered with three parallel fringes of coloured light; the neareſt to the ſhadow, the brighteſt; and the furtheſt very faint. The order of the colours, reckoning from the innermoſt, are violet, blue, green, yellow, red. So by looking on the ſun thro' a feather or black ribbon, held cloſe to the eye, ſeveral fringes of colours will appear.

Exp. 3. Let the ſun ſhine thro' a hole, a quarter of an inch broad; place a ſheet of paſteboard two or three feet off, blackt over on both ſides, and in the middle of it, a hole $\frac{3}{4}$ of an inch ſquare, for the light to paſs thro'. Behind the paſteboard faſten the blade of a knife very ſharp, to ſtop part of the light, going thro' the hole. The knife and paſteboard are parallel, and both perp. to the rays. Let a part of the light, which paſſes by the knife edge, fall upon a white paper two or three feet diſtant; and there will be made two ſtreams of light; which will appear fairer, if the light paſſes thro' a hole in the paper, and fall on a black cloth behind it. One of theſe ſtreams ſubtends an angle of about twelve degrees; and is perp. to the edge of the knife. And placing ones eye in the ſtream, a line of light will be ſeen upon the edge of the knife;

knife; and even when the eye is placed without the ſtream. Fig. 13.

Exp. 4. Placing another knife, with its edge very near and parallel to the firſt. If they be diſtant the 400th part of an inch, the ſtream of light, paſſing between them, will part in the middle, and leave a ſhadow between them, quite dark. As the knives approach the ſhadow grows broader, and the ſtream narrower at the inner end. Hence the light that is leaſt bent goes to the inner end of the ſtream, and paſſes at the greateſt diſtance from the knives. And this diſtance is about the 800th part of an inch, when the ſhadow begins firſt to appear. And the light which paſſes at diſtances leſs and leſs, is more and more bent; and goes to that hand which is furtheſt from the direct light. A little before the ſhadow appears the fringes begin to appear, on either ſide; and as the knives approach, they grow diſtincter and larger, till they vaniſh, the utmoſt firſt, and the reſt in order.

Hence one may conclude, that the light of the firſt fringe paſſes by the knife, at a greater diſtance than the 800th part of an inch, the ſecond at a greater diſtance, and the third greater ſtill. And the ſtreams of light at a leſs diſtance than any of the fringes.

Exp. 5. Take two knives with ſtrait edges, and prick them into a board, ſo as to make an angle with each other, and faſten them ſo that the angle may be invariable; let the angle be near two degrees. Place theſe in a beam of light, in a dark room, about the 42d part of an inch broad; 10 or 12 feet diſtant from the hole; and let the light paſſing between their edges, fall very obliquely upon a ſmooth white ruler, at $\frac{1}{2}$ an inch or an inch diſtance. Then you'll ſee the fringes made by the two edges of the knives, run along the edges of their ſhadows, in lines parallel to theſe edges, without growing

Fig. ing ſenſibly broader, till they meet in angles equal to that of the knives; and where they meet they end without croſſing. But when the ruler is held at a much greater diſtance, the fringes are narrower, the farther they are from the angular point, where they croſs, and then become much broader.

Hence, the diſtances at which the fringes paſs by the knives, are not increaſed or altered by the approach of the knives. But the angles, in which the rays are bent, are much increaſed by that approach. And the knife which is neareſt any ray, determines which way the ray ſhall be bent; and the other knife increaſes the bent. The diſtance of the edges of the knives (at the meeting of the dark lines between the firſt and ſecond fringes on each ſide) is the 160th part of an inch. Whence half the light paſſes by the edges of each knife, within the 320th part of an inch thereof, and falling upon the paper makes the fringes of the ſhadow of each knife. And the light which falls upon the paper where theſe dark lines meet, paſſes between the knives, where their edges are more than the 160th part of an inch diſtant.

The light which makes the fringes is not the ſame light at all diſtances of the paper from the knives. But when the paper is held near the knives, the light (that makes the fringes) paſſes at a leſs diſtance from the knives, and is more bent, than when the paper is held at a greater diſtance.

Exp. 6. If the paper be held at a great diſtance, perpendicular to the rays; the fringes of the ſhadows will be in the form of hyperbolas, of which there will be ſix for the three fringes on each ſide. In any one of theſe hyberbolas, one aſymptote is parallel to the edge of one knife, and its other aſymptote, is a line drawn perp. to the line which biſects the angle, and paſſes thro' the point where that

that direct ray of light cuts the paper, which ray passes thro' the angular point of the two knives. Therefore the angle of the asymptotes of all the hyperbolas will be in that point, where a line drawn from the sun, thro' the angle of the knives, cuts the paper. And these angles will be all obtuse; being greater than a right angle by half the angle of the knives. And the three hyperbolic fringes on one side are equal to these on the other. All these may be found, by actually measuring the ordinates, &c. and so proved to be hyperbolas. Fig.

Exp. 7. Let the sun shine thro' a small hole made by a pin in a plate of lead; and place a prism at the hole to refract the light, on the opposite wall. The shadows of all bodies held in the coloured light, are bordered with fringes of the colour of that light in which they are held; in the red they are red; in the blue, blue, &c. And the fringes made in the red light are largest, those in the violet, least; the green ones of a middle bigness. And they were so at all distances from the small body, as a hair, &c.

So then the rays which made the fringes in the red light, passed by the hair at a greater distance, than those which made the violet fringes. Therefore the hair in causing these fringes acted alike upon the red rays at a greater distance, as upon the violet at a less distance; and by these actions disposed the red light into larger fringes, and the violet into smaller, and middle ones into a middle size, without changing the colours of the rays.

When a hair is held in a white beam of the sun's light (Exp. 1 and 2.) and casts a shadow, which is bordered by three fringes of coloured light; these colours arise from the various inflexions, by which the rays are separated, and being separated, produce each its own colour. In this last experiment, where they are separated before the light comes

Fig. comes to the hair; the red or least refrangible rays, were inflected at a greater distance, and the violet or most refrangible rays at a less distance, making three violet fringes at a less distance, whilst the red makes three red fringes at a greater distance. And the other mean rays were inflected at mean distances, making three fringes of their proper colours, at mean distances, from the shadow of the hair. And in the white light, these colours are separated by the various inflexions of the rays, and their fringes appear all together; and the innermost fringes being contiguous make one broad fringe, composed of all the colours in due order; the violet being next the shadow, and the red farthest off, and the rest in their places. And in like manner the middlemost fringes compose one broad fringe, of all their colours; and the outmost fringes compose another broad fringe, like the rest. And these are the three fringes of coloured light, with which the shadows of all bodies are bordered, as in Exp. 2.

From all these experiments it is obvious, that the rays of light are acted on by some force or other that turns them out of their direct road. And as this force bends the rays not into the shadow of the body that acts upon them, but from the shadow; in that respect it must be a repulsive force, and (by Exp. 1.) is strongest at the least distance.

Cor. 1. *It is probable, that the rays of light in the points of contact with bodies, and extremely near it, are acted on by an attractive force. And at greater distances with a repulsive one.*

For if the rays were acted on in all cases and circumstances by a repulsive force; the light would all be expelled at once out of the luminous body. But it is more probable, that these particles of light are kept in the body by some attractive force; till they

they be ſhaken off by the vibrating motion of the Fig. body, and thrown beyond the reach of attraction; the contrary power of repulſion then begins, and drives it away with amazing velocity. Light is acted on entirely by attraction, by refraction in a denſe medium, being made towards the perpendicular.

Cor. 2. *This power which acts upon light is infinitely ſtronger than the force of gravity.*

For the velocity of light being ſurpriſingly great, and the ſmall diſtance the active force extends to, makes the time of acting, ſmall beyond all comprehenſion. And therefore in ſuch an infinitely ſmall time, the finite force of gravity would have no manner of effect.

Cor. 3. *The force of repulſion acting on light, decreaſes very faſt in regard to the diſtance; ſo that in a very ſmall ſpace it becomes nothing.*

The force of gravity decreaſes as the ſquare of the diſtance. But this force being reduced to nothing in a very ſmall ſpace, ſhews that it decreaſes far faſter than in that ratio.

Cor. 4. *Hence bodies and light act mutually upon one another; bodies, upon light by emitting, reflecting, refracting, and inflecting it. And light upon bodies, by heating them, and putting their parts into motion.*

For action and re-action are always equal and contrary.

Cor. 5. *Black bodies, grow hot ſooner by light than any other bodies; and white bodies later.*

For the light falling on them is not reflected, but enters the bodies; and by being often reflected and refracted within it, excite a briſk motion among the internal parts of it. But white bodies reflect moſt of the light, and therefore are but little affected by it.

PROP.

Fig.

PROP. XVII.

The motion of light is not instantaneous, but is performed in time; and spends about eight minutes in passing from the sun to the earth.

This is proved from the eclipses of Jupiter's satellites; for when the earth is between the sun and Jupiter, these eclipses happen about eight minutes sooner than they ought to do, by the rules of calculation. And when the earth is beyond the sun, they happen eight minutes later than they ought to do. The reason is, the light has a less distance to move over, from the satellites to the earth, in the first case, than in the second, by the diameter of the earth's orbit. And therefore the radius of the earth's orbit requires eight minutes of time for the light to pass thro' it.

Cor. *It is very probable, that the rays of light are extremely small bodies, projected with incredible velocity from the luminous body.*

For, 1. It is the property of a body to move thro' spaces which are proportional to the times, by a uniform motion; and light does this. 2. It is acted on by a body, when is is reflected, refracted, and inflected; and bodies can only act upon bodies. 3. Light cannot be increased or diminished. It can only be increased in any place, by robbing other places of its light; and it can only be diminished by conveying it to a different place. And all this may be done with bodies. So that we cannot increase it in one place, but we must decrease it in another. 4. Light consists of parts both successive in the same lines, and contemporary in several lines. For in the same place one may stop that which comes one moment, and let that pass which

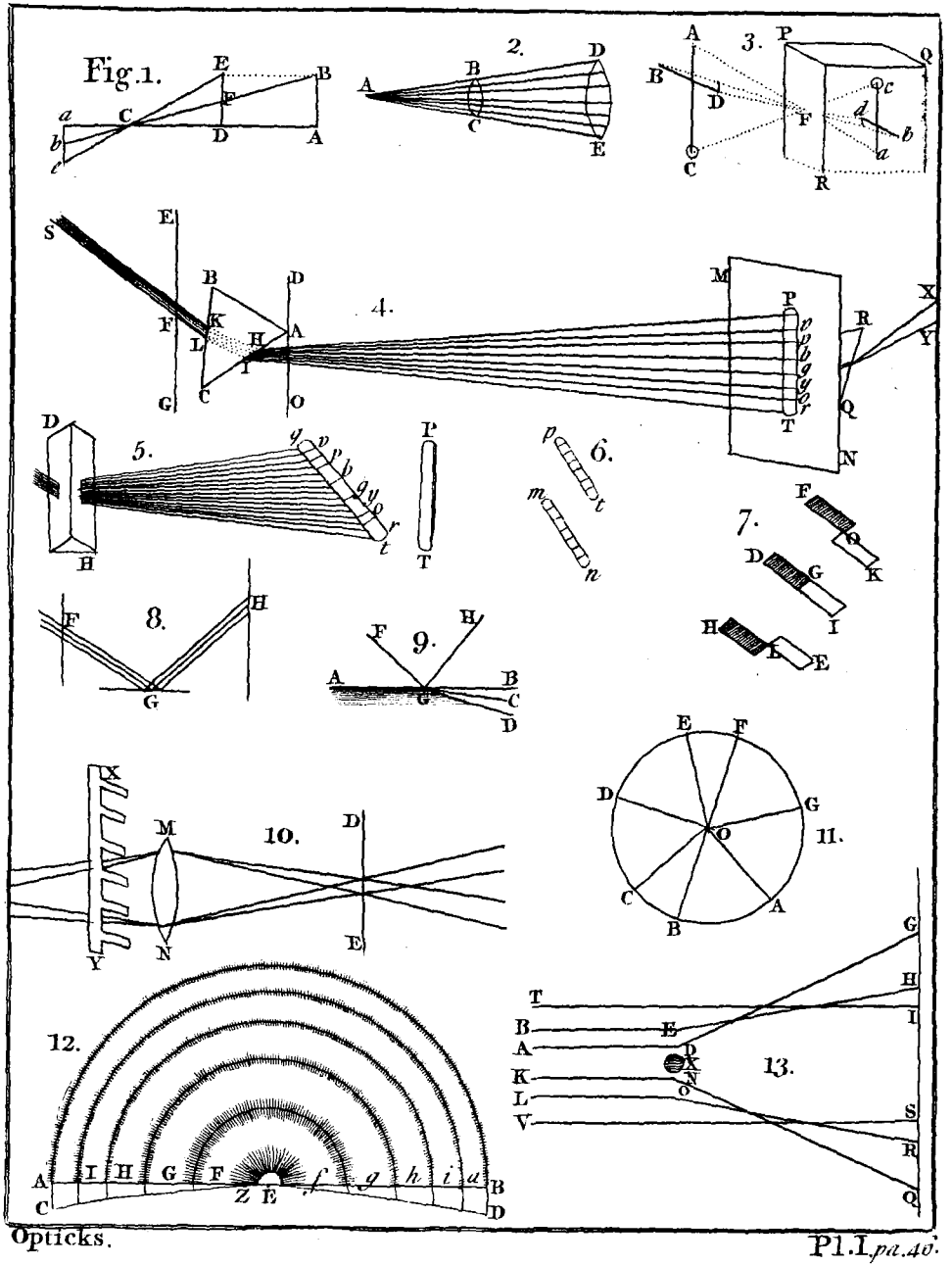

Opticks. Pl.I. pa.46.

which comes the next moment. And at the ſame time, one may ſtop it in one place and let it paſs in another. For that part of the light which is ſtopt, cannot be the ſame with that which is let paſs. And all theſe properties agree with what we find in bodies. Fig.

PROP. XVIII.

If light enters into a denſe medium, and in its motion in that medium, a part of it be loſt, ſo that only the part p gets thro' the ſpace a. Then the quantity of light which gets thro' the ſpace na in the ſame continued medium, will be p^n.

I take it for granted, that if any quantity of light paſſes into a denſe medium, and in moving thro' the ſpace *a* loſes any part, as $\frac{1}{10}$ thereof; if half the quantity of light enters it, it will loſe $\frac{1}{10}$ of that half in the ſame ſpace; or if a quarter of the light enters it, it will loſe $\frac{1}{10}$ of that quarter, and ſo on. Therefore there will always be a certain part of the incident light, get thro' equal ſpaces.

Suppoſe then $\frac{8}{9}$ the light, gets thro' the ſpace *a*; then $\frac{8}{9}$ of that, or $\frac{8}{9}$ of $\frac{8}{9}$ will get thro' the next ſpace *a*, that is, $\left(\frac{8}{9}\right)^2$ will get thro' $2a$, and $\frac{8}{9}$ of that or $\left(\frac{8}{9}\right)^3$ will get thro' $3a$; and ſo on. Therefore $\left(\frac{8}{9}\right)^n$ of the entring light will get thro' the ſpace *na*. And inſtead of $\frac{8}{9}$ putting *p*, the quantity of light getting thro' the ſpace *na*, will be p^n.

Cor 1. *If* $1-p$ *be the light loſt or deſtroyed in paſſing thro' the ſpace or depth a*; $1-p^n$ *will be the light loſt in paſſing thro' the depth na.*

Cor.

Fig. Cor. 2. *The light transmitted at the depth ma, is to the light transmitted at the depth na, as p^m to p^n.*

Cor. 3. *The light transmitted thro' the depth a, is to the light transmitted thro' the depth na, as 1 to p^{n-1}.*

For the lights transmitted are as p to p^n, that is, as 1 to $\frac{p^n}{p}$ or p^{n-1}; where n may be whole or fractional.

PROP. XIX.

The brightness of an object is nearly the same, at all distances of the eye from it.

For if the eye at any distance receive any quantity of light, at half that distance it will receive four times the light, and the picture upon the retina will be four times as big, whence the density or brightness continues the same. Also at a third part of the distance it receives nine times the light, and the picture in the eye will be nine times as big; and therefore the density is still the same. Or in general at $\frac{1}{n}$ of the distance, n times the light comes into the eye, and the picture is n times as big, and the density the same as before, because n times the light is spread over n times the space.

PROP. XX.

The proportion of moon light to day light, or the light of the sun, at full moon, is as 1 to 96 thousand, nearly.

For the moon's radius is to the earth's radius as 1 to 3.65; and since the radius of the moon's orbit is 60 of the earth's radii; therefore the radius of the moon's orbit, or its distance from the earth is 60×3.65 or 219 of the moon's radii.

Now

Now ſuppoſe equal ſpaces at the earth and moon to be equally illuminated; and that the whole ſurface of the moon was thus equally illuminated, and the light reflected therefrom all around, ſo far as the ſurface of a ſphere paſſing thro' the earth, deſcribed from the moon's center; then all this light is ſpread upon this ſurface; and conſequently its denſity will be leſs in the reciprocal proportion of theſe ſurfaces, or reciprocally as the ſquares of the diameters. That is, the denſity of the light at the moon (which is ſuppoſed the ſame with day-light) is to the denſity at the earth (reflected from the moon); as the ſquare of 219 to 1, or as 47961 to 1. But ſince in reality, there is not ſo much light falls on the moon, being no more than what falls on her diſk, and her diſk being but half her hemiſphere; the denſity of light at her ſurface, upon each hemiſphere will be but half as much. And it matters not whether any falls upon the oppoſite diſk or not, for (by the rule of proportion) that would all be reflected to the oppoſite hemiſphere, and does not concern us, who are oppoſed to the full moon. Therefore it will now be, as day-light, to moon-light; ſo is 47961 to $\frac{1}{2}$, or as 95922 to 1, or in round numbers as 96000 to 1. Fig.

Cor. 1. *Moon-light is to day-light; as half the ſquare of the moon's radius, to the ſquare of the moon's diſtance, when ſhe is full. And in the quadratures, as $\frac{1}{4}$ the ſquare of the moon's radius, to the ſquare of the moon's diſtance.*

After the ſame manner may be found the light of any other celeſtial body, compared with day-light; let it be *Venus*. Let d = ſun's diſtance from the earth, v = Venus diſtance from the ſun, a = her diſtance from the earth, r = her radius. Then if Venus and the earth were equally illuminated by the ſun, then is her light to day-light : :

 $\frac{1}{4}rr$:

Fig. $\frac{1}{4}rr : aa$. But Venus being nearer the ſun, is more enlightned in the ratio of $\frac{dd}{vv}$ to 1; therefore her light is to day-light : : $\frac{1}{4}rr \times \frac{dd}{vv} : aa : : \frac{1}{4}\ rrdd : vvaa$. But ſince in her quadratures, $d = a$ nearly, therefore, Venus's light is to day-light; as $\frac{1}{4}rr$ to vv. And that is as 1 to 804.000000, nearly. Hence,

Cor. 2. *The light of Venus in her quadratures, is to day-light; as* 1 *to* 800 *millions.*

This is ſuppoſing the radius of Venus, to her diſtance from the ſun, to be as 1 to 14200.

Cor. 3. *Hence the light of the moon is* 8000 *times as great as the light of Venus. Suppoſing they both of them reflect all the light that falls on them.*

BOOK

BOOK II.

CATOPTRICS; OR REFLECTED VISION.

DEFINITIONS.

DEF. I.

CATOPTRICS, treats about that part of Optics, which relates to ſeeing, or making the pictures of objects by reflected light. Fig.

DEF. II.

A *Speculum* or *Mirror* is any poliſhed ſurface, commonly of glaſs or metal, which reflects the rays of light; and may be either *plain*, *concave*, or *convex*. The glaſs ones are commonly quickſilvered over on the backſide; to make the reflexion ſtronger.

PROP. I.

If a ray of light be reflected from a plain ſurface; the angle of reflexion will be equal to the angle of incidence.

It is ſhewn in Prop. XVI. that the rays of light in being reflected or refracted, are acted on by the bodies they come near, by repelling or attracting them. And theſe forces, be what they will, muſt act in lines perpendicular to the ſurfaces of theſe bodys; and that force muſt be equal at equal diſtances from the reflecting or refracting ſurface.

Fig. 14. Let AB be the incident ray, CD the reflected one. RS the reflecting surface, PQRS the infinitely thin space, within which the repulsive force of the body is contained, AB*m*CD the progress of the ray. Draw an infinite number of lines parallel to PQ or RS, such as *nt*, *oq*. Then since the repulsive force begins at B, it will continually bend or inflect the ray, into the curve B*om*, till it comes to its lowest point *m*, where it will be parallel to the reflecting surface. Afterwards it will recede from the plane SR, describing the curve *mq*C. And since the forces are equal at the equal distances *o* and *q*, *n* and *t*, &c. therefore the particle of the curve *mq*, will be equal and similar to the particle *om*, and *qt* to *on*. And for the same reason, all the particles of the curve *mq*C will be equal and similar to the corresponding particles of the curve *mo*B; and therefore the whole *mq*C will be equal and similar to the whole *mo*B. And consequently the angles at C and B will be equal; and the angle of reflexion equal to the angle of incidence, being their complements.

Cor. 1 *If a ray of light be reflected from any point of a curve surface; the angle of reflexion is equal to the angle of incidence.*

For it is the same thing as if it was reflected from a plane touching the curve in that point.

Cor. 2. *The ray of incidence and reflexion are both in a plane, perpendicular to the reflecting surface, in the point of incidence.*

For there is no force acting out of that plane.

Cor. 3. *A ray of light falling perpendicular to any surface, is reflected back in the same perpendicular. But moving parallel to it, will continue so.*

Cor.

Cor. 4. *If the reflected ray at* O, *return back thro'* OS, *it will be reflected to* R. Fig. 14.

SCHOLIUM.

The curve B*omq*C described by the ray of light, is so extremely small, that it may be looked upon as a single point. And therefore the points B and C may be supposed to coincide.

PROP. II.

If rays proceeding from a radiant point R *fall upon a reflecting plane surface* PL; *the focus of the reflected rays, will be at* F, *in the line* RF *perp. to the reflecting surface; and as far on the other side of it. That is* PF = PR. 15.

For since RPF is perp. to PL; let RS be any incident ray; and SO the reflected ray. Produce OS backward to F. Then (Prop. I.) $<$PSR = $<$LSO=PSF. Therefore in the right angled triangles PSR, PSF; all the angles are respectively equal, and PS common; therefore RF equal PF. Therefore the reflected ray SO proceeds from F, in the perp. RF, so that PF = PR. And by the same reasoning, if RN be any other incident ray, its reflected ray NH will proceed from F. And therefore F is the virtual focus of all the reflected rays, which therefore all diverge from F.

Cor. 1. *The distance of the focus* F *from the eye at* O, *is equal to the incident and reflected rays taken together,* OF = OS + SR.

For OF = OS + SF = OS + SR.

Cor. 2. *Rays converging to* F, *and reflected by the plane* PL, *converge to* R.

Cor. 3. *If rays proceeding from an object at* R *be reflected by the plane* PL *to an eye at* O; *the object*

Fig. 15. *will appear to be placed at* F, *the focus of the reflected rays, where they last diverged from.*

For we always judge an object to be in that place, from whence the rays proceed directly to the eye; which here is from F.

PROP. III.

16. 17. *If rays proceeding from a radiant point* R, *fall upon any point* S *of a reflecting spherical surface* VS, *and* F *be the focus of the reflected rays; it will be,* SR : CR : : SF : CF. C *being the center of the sphere.*

For (*fig.* 16.) the angle of reflexion CSF being equal to the angle of incidence CSR (Prop. I.); therefore the angle RSF is bisected; and therefore (Geom. II. 25.) SR : SF : : CR : CF.

And (*fig.* 17.) draw FA parallel to RS, and produce CS to B; and if FSD be the reflected ray, then the angle FSA = BSD = (Prop. I.) BSR = SAF; therefore SF = AF. Then by the similar triangles CRS and CFA, SR : CR : : AF or SF : CF.

Cor. 1. *If the radiating point* R, *and the focus* F, *be both on one side the reflecting surface. If the rays diverge from one, they converge to the other.*

Cor. 2. *If the radiating point* R *and focus* F *be on different sides of the reflecting surface; if the rays diverge from one, they diverge from the other. But if they converge to one, they converge to the other, by reflection.*

Cor. 3. *If* R *is at an infinite distance, then* SF = CF.

For then CR = SR, and consequently CF = SF.

Cor.

Cor. 4. *If* R *is the radiant point; make the* $\angle$ RSC = CSF, *or* RSB = BSD, *and draw* SF, *or* DSF, *and* F *is the focus of the reflected rays.* Fig. 16. 17.

Cor. 5. *The focus of rays proceeding from any radiant point* R; *is in the line* RCV, *joining the point* R *and the center.*

For taking V*s* = VS, the focus is in the place where the rays meet, which are reflected from all points of the arch S*s*. Let RS, R*s* be two correspondent ones, then the angles SRF, *s*RF, being equal, and also RSF and R*s*F; therefore SF, *s*F will meet somewhere in the line RCV, at F.

Cor. 6. *A small object placed in the center, cannot be seen by reflexion. Or the eye placed in the center, can see nothing by reflexion.*

For all the reflected rays go also to the center.

PROP. IV.

If VA *be a reflecting spherical surface, whose center is* C. *And if a ray of light* RA (*or* GA) *parallel to* CV, *fall upon* A, *and be reflected to* F. *Draw the tangent* AT; *then will* TF = FC. 18.

For CAT being a right angle, and (Prop. I.) $\angle$ CAF being = angle CAR; we shall have

$$CAT = \frac{RAF + FAG}{2},$$

and $$CAF = \frac{RAF}{2}$$

then by subtraction $FAT = \frac{FAG}{2} = TAG = ATF$;

therefore TF = AF = FC, because $\angle$ CAF = CAR = ACF.

Cor. 1. *Hence* FC, FA, FT, *are all equal to one another.*

Cor. 2. *The tangent* AT *bisects the angle* FAG.

Fig. 18. Cor. 3. *If* CQ = QV, *then* Q *is the focus of the rays falling on* V, *or the principal focus.*

Cor. 4. *And* QF (= *half* TV) *is the space on which all the rays fall that come from the whole surface* AV.

19. Cor. 5. *If* AV *be any curve, and a ray of light* RA (*or* GA) *be reflected into the line* AH. *If* VL *be drawn parallel to* AR, *and* AL *perp. to the curve at* A. *Then* AH = HL.

For produce AL to C, that AC may be the radius of curvature in A; draw CF parallel to VL, and produce AH to intersect it in F. Then F is the focus of the rays reflected by the circle, passing thro' A, and therefore of the portion of the curve at A that coincides with it. Therefore (Cor. 1.) CF = AF, and consequently (by similar triangles) LH = AH.

Cor. 6. *When parallel rays fall on the surface of a sphere, those nearest the vertex, have their focus nearest the center.*

PROP. V.

20. 21. *If a* VA *be a small portion of a reflecting spherical surface,* C *its center,* V *its vertex &* R *the radiant point, ~~from or towards~~ which the rays flow;* F *the focus after reflexion at* A. *Then it will be* VR : VF :: CR : CF, *nearly.*

For (Prop. III.) If A be the point of incidence, it is AR : AF :: CR : CF. But the arch VA being extremely small, AR = VR, and AF = VF, very near. Therefore VR : VF :: CR : CF.

Cor. *The points* R, F *are conjugate foci to one another; that is, if* R *be the radiant point,* F *will be the focus; or if* F *be the radiant point,* R *will be the focus. Where I use radiant points in a general sense,*

for

for the point, which the rays either diverge from, or converge to, before reflexion. Fig.

PROP. VI.

If aVA *be a small portion of a reflecting spherical surface, whose center is* C, *and* V *its vertex. And if parallel rays, or those from an infinite distance, as* RA ~~or GA~~, *fall upon it, and* F *be the focus of the reflected rays; then* F *is in the middle of the radius* VC, *or* VF = FC. 22.

For (by the last Prop.) VR : CR : : VF : CF. But because R is infinitely distant, VR = CR, therefore VF = CF.

Cor. 1. *Rays diverging from* F, *the middle point of the radius, or converging to* F, *and reflected by the spherical surface* VA: *will after reflection go parallel to one another.*

Cor. 2. *A luminous body placed in* F *the middle point of the radius, will cast a light to a great distance, by reflexion from the concave surface.*

Cor. 3. *The principal focus of a reflecting spherical surface, is in the middle point of the radius at* F. *And the principal focal distance* FV, *is half the radius.*

PROP. VII.

Let A*a be a small part of a reflecting spherical surface;* C *the center,* V *the vertex,* P *the principal focus,* R *the radiating point (or that which the rays diverge from, or converge to, before reflexion). And if* F *be the focus after reflexion, then will* PR, PC *or* PV, *and* PF, *be in continual proportion.* 23. 24.

For (*fig.* 23), since VF — PF = PF + FC, therefore VF — FC = 2PF. But (Prop. V.) VR : VF

Fig. 23. 24. : VF : : CR : CF; by division VR : VF : : VR — CR (VC) : VF — CF (2PF) : : 2VP : 2PF : : VP : PF. And again, by division VR : VF : : VR — VP (PR) : VF — PF (VP). Therefore PR : VP : : VP : PF.

And (*fig.* 24.) VR : VF : : CR — VR (CV or 2VP) : CF — VF (2PF) : : VP : PF. And by addition, VR : VF : : VR + VP (PR) : VF + PF (VP.) Therefore PR : VP : : VP : PF.

Cor. 1. F *and* R *are conjugate foci to one another, and lye always the same way from* P.

Cor. 2. *The rectangle of the distances of the radiant point, and of the focus, from the principal focus; is equal to* $\frac{1}{4}$ *the square of the radius of the sphere.* $PR \times PF = \frac{1}{4} VC^2$.

Cor. 3. *The principal focal distance, is equal to the rectangle of the distances, of the focus, and of the radiant point, from the vertex, divided by the sum or difference of these distances; according as* F *and* R *are on the same or different sides of* V. $VP = \frac{VR \times VF}{VR \pm VF}$.

For we had VR : VF : : PR : PV. And $VR \times PV = VF \times PR = VF \times \overline{VR \mp VP}$, and $PV \times \overline{VR \pm VF} = VF \times VR$.

Cor. 4. *If* R *be the radiant point,* F *its correspondent focus; or* R *and* F, *conjugate foci; the distance of that focus* F, *from the principal focus* P, *or* $PF = \frac{VF^2}{VR \pm VF}$: *according as* F *and* R *are on the same or different sides of* V.

For $PF = VF - VP = VF - \frac{VR \times VF}{VR + VF} = \frac{VF^2}{VR + VF}$. Or $PF = VP - VF = \frac{VR \times VF}{VR - VF} - VF = \frac{VF^2}{VR - VF}$.

SCHO-

Fig. 23. 24.

SCHOLIUM.

The 3 last propositions lay the foundation of all that is practicable in Optics, so far as reflected light is concerned. For no curve whatever is made use of to reflect the rays of light, except the sphere; no method being yet found out to grind glasses accurately into any other curve. And in using spherical surfaces, a small segment only is to be taken; because the parts of the surface remote from the vertex, reflect the rays to different focus's; which are so much further from the principal focus, as the reflecting part is further from the vertex. And therefore if a large segment was used, the rays from any single point of an object, could not be brought to a single point in the focus, which would be attended with a deal of confusion.

The following proposition gives a general rule for determining the foci of all glasses universally whether convex or concave; and whether the rays diverge or converge, and from whatever distances, finite or infinite, they proceed.

PROP. VIII. *Prob.*

25. *Let* A*a be a small portion of a reflecting spherical surface,* C *its center,* R *the radiating point. To find* F *the focus of the rays after reflexion.*

Put the distance VR $= d$
radius of the sphere CV $= r$
focal distance VF $= f$.

Then $f = \frac{dr}{2d + r}$, *very near. Where, if the rays converge, or* AV *be concave*, d *or* r *will be negative.*

For CR $= d + r$, and CF $= r - f$. And (by Prop. V.) VR : VF : : CR : CF; that is, $d : f :: d + r$

Fig. 25. $d + r : r - f$. Whence $dr - df = df + rf$, and $dr = 2df + rf$; and reduced, $f = \frac{dr}{2d+r}$.

Cor. 1. *If d is infinite, or* R *is at an infinite distance, then r vanishes, and* $f = \frac{1}{2}r$.

Cor. 2. *If* R *is on the concave side, d is negative, and* $f = \frac{-dr}{-2d+r}$, *that is,* $f = \frac{dr}{2d-r}$. *And moreover, if r is infinite, as in a plane surface,* $f = -d$.

Cor. 3. *If r is negative, or the reflecting surface concave towards* R, *then* $f = \frac{-dr}{2d-r}$, *that is,* $f = \frac{dr}{r-2d}$.

Cor. 4. *If* AV *is concave towards* R, *and d infinite, then r is negative, and* $f = \frac{-dr}{2d}$, *that is,* $f = -\frac{1}{2}r$.

Cor. 5. *If it is a plane surface, then r is infinite, and* $f = d$.

And many other corollaries may be deduced.

SCHOLIUM.

It is easy to know whether the focus be real or virtual, by the direction and motion of the rays; that is, by their converging or diverging after reflexion.

From this general solution it is plain, that when the focal distance comes out affirmative, it is to be taken right forward; but if negative, it must be taken backward, from the vertex.

From this Prop. several other Problems may be resolved. As if it was required to know, what must be the radius of a sphere, to represent the given

given object R, at the given focus F. Here r is to be found from the equation $f = \frac{dr}{2d+r}$; multiply by $2d + r$ and we have $2df + rf = dr$, and $dr - fr = 2df$, whence $r = \frac{2df}{d-f}$, the radius of the sphere. From this equation, it is plain, that if d be greater than f, the reflector will be convex towards the object. But if f be greater than d, r will come out negative, and the reflector will be concave to the object. If d be equal to f, r comes out infinite, and in this case, the speculum must be a plane surface. Fig. 25.

Again, if it be required to find the distance of an object R, from the given speculum AV, to have the focus at the given place F. Here we want to find d, from the equation $f = \frac{dr}{2d+r}$; by multiplying, we have $2df + rf = dr$, and transposing, $dr - 2df = rf$, whence $d = \frac{rf}{r-2f}$, the distance from a convex speculum. But if the speculum be concave to the object, then $d = \frac{rf}{r+2f}$. Hence in a convex speculum if r be greater than $2f$, the object will be on the convex side. But if $2f$ be greater than r, it will be on the concave side. And if $r = 2f$, the distance of the object will be infinite; and f will be the focal distance of parallel rays.

The principal focus of a reflecting spherical surface may also be found by experiments, as follows.

1. For a concave reflector. Hold it directly before the sun, and hold a bit of paper before it to receive the reflected light. Move this paper back and forward till the white spot of light be the least possible, and that is the focus.

Or,

Fig. 25. *Or thus*, cover it with paper having several pin holes made in it. Then hold a piece of paper before it, and you'll see so many white spots on it made by the light reflected thro' the pin holes. Move the paper back and forward, till they all coincide, and there is the focus.

2. For a convex reflector. Cover it with paper, having two pin holes made in it on contrary sides. Then expose it to the sun beams, and hold another paper before it, having a hole made in it so big as to let the sun's rays pass thro' to the two pin holes. Then you will see two white spots of reflected light on each side the hole. Move the paper back and forwards, till the distance of the spots be twice the distance of the holes in the cover, first marked upon the paper. Then the distance of the paper from the lens is the principal focal distance.

PROP. IX.

26. *If rays flow from one focus* R *of a spheroid or hyperboloid* BA; *they will be reflected by the curve surface, into the other focus* F.

For (Conics, B. I. Prop. X.) the lines AR, AF drawn to the foci of an ellipsis, make equal angles with the curve; and therefore the angle of incidence is equal to the angle of reflexion. And the same is true of the hyperbola (ib. B. II. Prop. IX.); therefore if RA be the incident ray, AF will be the reflected one.

Cor. *Hence* F *is the real focus in the ellipsis, and only a virtual focus in the hyperbola.*

PROP.

Fig.

PROP. X.

If rays RA, *parallel to the axis of a paraboloid* BA, *be reflected by the surface thereof; they will all be reflected into* F *the focus of it.* 27.

For (by Prop. VIII. Cor. 3. B. III. Conics), the line FA drawn to the focus, and RA parallel to the axis, make equal angles with the curve at A. Therefore if RA be the incident ray, AF will be the reflected one.

Cor. *Rays proceeding from the focus* F, *will be reflected by the surface of the paraboloid, parallel to the axis.*

PROP. XI.

Wherever the rays, which come from all the points of an object, meet again in so many other points, after they have been made to converge by reflexion; there they will make the picture of the object upon a white paper, or any white body.

For if PR be any object, A*a* a concave speculum, the rays that diverge from any point Q, fall upon the speculum A*a*, and are reflected to their focus *q*, where they all meet, and upon a white paper held there give *q* the image of Q. In like manner the light which diverges from P, will be reflected from the speculum to their focus *p*. And all the light diverging from R, will be reflected to their focus *r*. And thus from every point in the object, the light will be reflected to so many correspondent points in the focus; and will form there the picture *pqr*, of the object PQR, in its proper shape and colours; but sometimes the picture will be inverted; as in this figure, where the upper end is downward, and the right to the left hand. 28.

Cor.

Fig. 28. Cor. 1. *The rays of light flowing from all the points of an object* PR, *paint the image thereof pr in the real focus q; and it may be seen there hanging in the air, by an eye at* O, *placed at a proper distance, and situation to receive the rays coming from it.*

Cor. 2. *The extreme point of the image, as r, is determined by the extreme ray* R*r drawn thro' the center* C.

PROP. XII.

The image of a right line made by a reflecting plane surface, is also a right line.

29. Let AB be a reflecting plane, PR a right line, Q the middle point of it. Draw P*p*, Q*q*, R*r*, perpendicular to the plane AB, cutting it in D, I, L. And make D*p* = DP, I*q* = IQ, and L*r* = LR, then (Prop. II.) *p*, *q*, *r*, will be the foci of P, Q, R; and *pr* the image of PR. Whence the figure DPQRL is similar and equal to the figure D*pqr*L, by construction. And therefore since PQR is a right line, *pqr* is also a right line.

Cor. 1. *Hence the image of a plain figure, seen in a reflecting plain surface, is also a plain figure, equal and similar to the figure itself.*

For all the right lines drawn in it, are represented by right lines, equal to those in the exposed figure. And therefore the figure and its image are equal and similar.

30. Cor. 2. *The image of any object, made by an upright reflecting plane, has its parts in a contrary position, the left side being to the right, and the right to the left hand; the difference being the same as the seal, and its print on the wax. But in a horizontal reflector, the object will appear upside down; the parts lying to either hand, remaining the same as in the object.*

For

For if ABC be a perp. reflector; the object PQR, making the image *pqr*, where P on the left being nearest the glass, will be represented by *p* on the right hand, also nearest the glass. But standing at D and viewing the upright object PQR, in the reflector ABC, laid horizontally; the lowest point P, nearest the glass, will be represented by the highest point *p*, also nearest the glass; whilst R *and r* are on the right, and Q, *q* on the left. Fig. 30.

Cor. 3. *What has been said of the image of an object, is also true of the image of an image.*

Cor. 4. *Changing the situation of the eye, does not at all change the situation of the image; it will always appear in the same place, whilst the object and reflector are fixt.*

Cor. 5. *When an object is seen by a plain speculum; its image appears as far behind the speculum, as the object is before it.*

PROP. XIII.

If AV*a be a spherical reflector, the object* PQR *an arch of a circle, having the same center* C, *its image pqr, by reflexion, will also be an arch of a circle, having the same center* C. *And its image will be direct or inverted, according as it is on the same or different side of the center* C, *with the object.* 31. 32.

Here *p* is the focus of P, *q* of Q, and *r* of R. Let *e*, *f*, *g*, be the principal foci, of the points A, V, *a*, of the reflecting surface. Then (Prop. VII.) we have *f*Q : *f*C (*f*V : *fq*,) in continual proportion, and *g*R : *g*C : *gr*; also *e*P : *e*C : *ep*, also in continual proportion. But the two first terms are the same in all, and therefore the last; that is $fq = gr = ep$. And since $fC = gC = eC$, the sums or

 remainders

Fig. remainders will be equal, $qC = rC = pC$, therefore
31. rpq is the arch of a circle whose center is C.
32. And since the rays cross at the center C, if the image be on the same side of C as the object, it will be in the same position; but on different sides, in a different position.

Cor. 1. *The length of the object* PR, *is to the length of the image* pr; *as* CP *the object's distance from the center, is to* Cp *the distance of the image from the center.*

Cor. 2. *On the contrary, if* pqr *be a circular object, its image* PQR *will also be a circular arch concentric with the object.*

Cor. 3. *The image of a spherical surface, seen by reflexion in a spherical reflector parallel to it, will appear a spherical surface, also parallel to it.*

PROP. XIV.

33. *If a right line be placed directly before a concave*
34. *reflector, its image will appear concave; but in a convex reflector, the image will appear convex.*

To the center of the glass C, describe the arches PQR, pqr; so as pqr may be the image of PQR. And let the exposed lines be OQ or oq, tangents to the arches PQ, pq, in Q and q. Then if the arch PQ be an object, the arch pq will be its image. Let e, f, g, be the principal foci to the points A, V, a. Then (*fig.* 33.) we shall have (by Prop. VII.) $ep : eC : eP$, and also $eo : eC : eO$, continual proportionals; supposing o the image of O. Therefore $ep \times eP = eC^2 = eo \times eO$, whence $ep : eo :: eO : eP$. And by division $ep : ep - eo\ (op) :: eO : eO - eP$ (OP), and alternately $ep : eO :: op : OP$, or

$$\frac{ep}{eO}$$

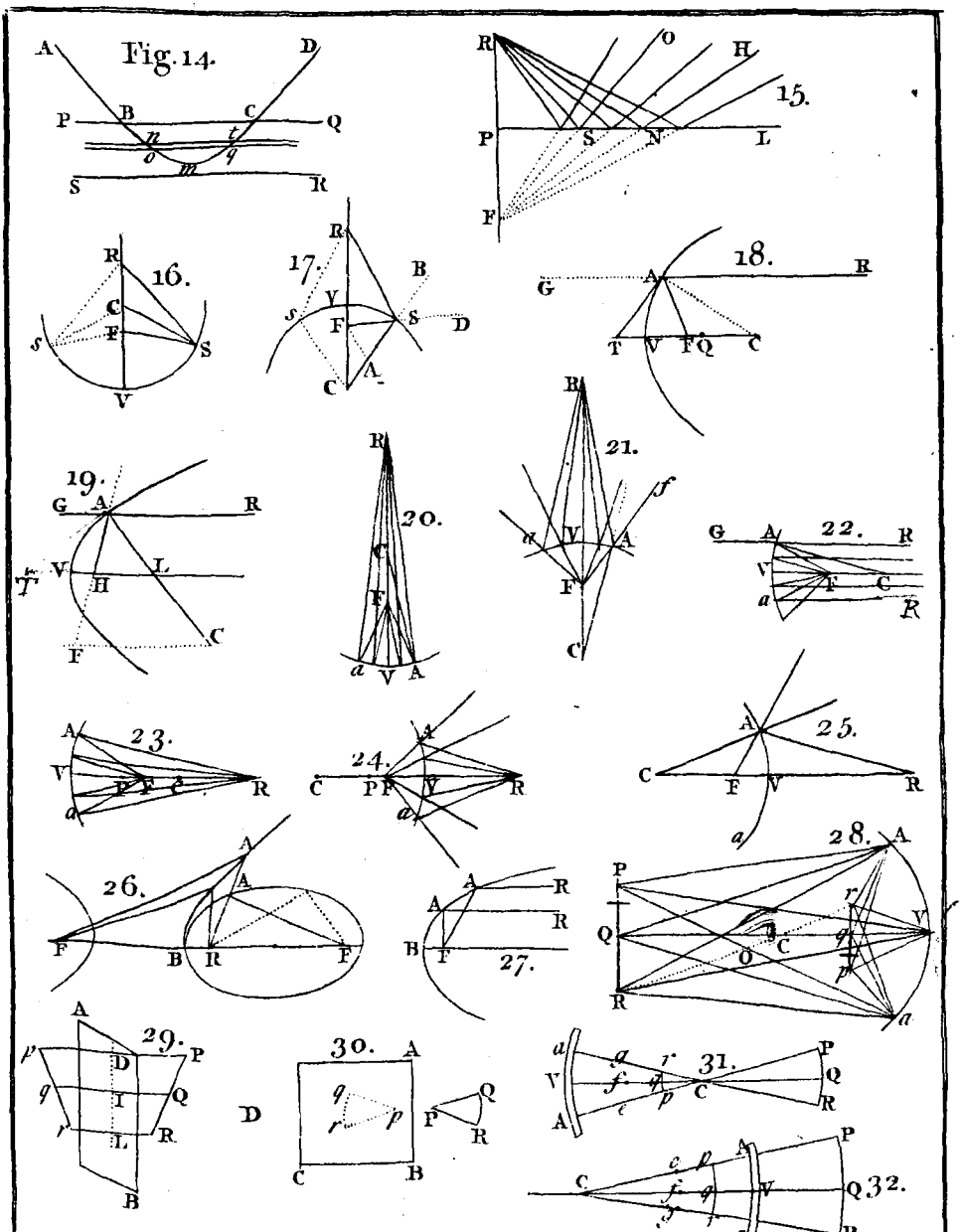
Fig. 14.
15.
16.
17.
18.
19.
20.
21.
22.
23.
24.
25.
26.
27.
28.
29.
30.
31.
32.

$\frac{ep}{eO} = \frac{op}{OP}$. But if qo be also a right line, the figures pqo and PQO will be similar; whence $\frac{Cp}{CP}$ would be $= \frac{op}{OP}$. But $\frac{op}{OP}$ is less than $\frac{Cp}{CP}$; for since $ep : eC :: eC : eP$, by division $ep : eC :: eC - ep\ (pC) : eP - eC\ (CP)$, therefore $\frac{ep}{eC} = \frac{Cp}{CP}$. But $\frac{ep}{eC}$ is greater than $\frac{ep}{eO}$; therefore taking their equals, $\frac{Cp}{CP}$ is greater than $\frac{op}{OP}$, or $\frac{op}{OP}$ less than $\frac{Cp}{CP}$. Therefore oq (the picture of OQ) will not be a right line, but po will be less; and therefore oq will be concave towards C. Fig. 33. 34.

On the contrary, if oq (concave towards C) be the object, the right line OQ will be the picture. But then a right line oq being an object, will not have the right line OQ for its picture. For as o approaches e, O will go farther from P. And therefore OQ (the picture of the right line oq) will be convex towards V, or concave the contrary way. So that when the image appears on the concave side of Aa, it is always convex towards Aa, or concave the contrary way, that is, towards the eye.

Again, (*fig.* 34.) since pq is the image of PQ an object; if QO becomes an object, then as O goes further from A, its image will advance from p towards e; and therefore the image of the right line OQ will be more curve than before, being convex towards AV.

On the contrary, if the arch pq be an object, the arch PQ will be its image; and therefore if the line oq be an object, where o approaches nearer A, P (the image) will also approach nearer A, and the image will then be more concave towards V,

Fig. or towards C. So that in all cases, a concave re-
33. flector makes the image concave.
34.

Cor. 1. *The image of a right line is more curve when seen beyond any reflector; than when seen nearer to the eye, or on the same side.*

Cor. 2. *Any plane figure standing directly before a concave reflector, will appear concave; and before a convex one, convex.*

Cor. 3. *The image of a short right line or plane, is nearly a right line or plane figure.*

Cor. 4. *A right line at the center of a concave reflector, will appear a right line.*

For then $\frac{op}{OP} = \frac{Cp}{CP}$.

PROP. XV.

35. *The object and its image, subtend equal angles at*
36. *the vertex of the reflector:* PVR $=$ pVr.

Let PR be an object, pr its image. Thro' the center C, draw QCV perp. to PR. Draw VP, VR, Vp, Vr, and PpA, Rra, passing thro' C. Then (Prop. V.) VQ : Vq : : QC : qC : : (similar triangles) PQ : pq. And since the angles at Q and q are right, the angle PVQ $=$ pVq. In like manner RVQ $=$ rVq; whence PVR $=$ pVr.

Cor. *Hence the object and its image are equal to one another, where they meet together.*

PROP.

Fig. 35. 36.

PROP. XVI.

The linear magnitude or diameter of the object PR, *is to the magnitude of the image pr; as the distance of the object from the vertex of the glass* VQ, *to the distance of the image from it* V*q*.

For (last Prop.) the angles PVR and *p*V*r* being equal, and the triangles PVR and *p*V*r* similar, we have PR : *pr* : : VQ : V*q*.

Cor. 1. *The diameters or linear magnitudes of the object and image; are as their distances from the center of the reflector.* PR : *pr* : : CQ : C*q*.
For PR : *pr* : : VQ : V*q* : : (Prop. V.) CQ : C*q*.

Cor. 2. *If f be the principal focus; then the diameter or linear magnitude of the object, to that of the image; is as the principal focal distance, to the distance of the image from the principal focus; or as the distance of the object from the principal focus, to the principal focal distance.*
For we had PR : *pr* : : VQ : V*q* : : CQ : C*q* : : VQ — CQ (or CQ — VQ) : V*q* — C*q* (or C*q* — V*q*) : : CV : 2*fq* : : *f*V : *fq* : : *f*Q : *f*V.

Cor. 3. *Hence also it follows, that a convex reflector lessens an object.*

Cor. 4. *Also a concave reflector lessens an object, when it is farther from the glass than the radius of the reflector.*

Cor. 5. *But a concave reflector magnifies an object, when it is nearer to it, than the radius of the reflector; and then only.*

Cor. 6. *The image pr is always terminated at p, by the extreme ray* PA, *which passes thro' the center*

Fig. 35. 36. C *of the reflector. And if the object be at an immense distance, it is terminated by the radius* CA, *drawn parallel to the extreme ray* PV, *at the vertex.*

For when the object is infinitely distant, PV and PCA are parallel.

SCHOLIUM.

If it be required to find the place of an object, that its diameter shall be to the diameter of the image, in the given ratio of m to 1. It is easily done by the VIIIth Prop. For since $d : f :: m : 1$, therefore $\frac{d}{m} = f = \frac{dr}{2d+r}$, whence $2d+r = mr$, and $2d = mr - r$, therefore $d = \frac{m-1}{2} r$, for a convex speculum; in which case m is always greater than 1. But if m be less than 1, then d comes out negative; that is, the object must be always on the concave side, to have the image magnified. In like manner, any two, d, r, or m being given, the third may be found.

PROP. XVII.

As the distance of the object from the principal focus of a reflector, is to its distance from the reflector; so the principal focal distance, to the distance of the image from the reflector. $fQ : VQ :: fC : Vq$.

For f being the principal focus, we have (by Prop. XVI.) $VQ : Vq :: PR : pr$. And (by Cor. 2. Prop. XVI.) $PR : pr :: fQ : fV$; therefore $fQ : fV$ or $fC :: VQ : Vq$.

Cor. *If the object and image be equidistant from the reflector; they will coincide either in the center or vertex of the reflector, and become equal.*

For if $VQ = Vq$, then $fQ = fC$ or fV, and Q falls upon C, or else upon V; and then $pr = PR$.

PROP.

Fig. 35. 36.

PROP. XVIII.

In a convex speculum, the image always appears erect and on the other side of the glass, as in a plain speculum. And so it does in a concave, when the object is between the glass and the principal focus. But in a concave speculum, when the object is further from it than the principal focus, the image is on the same side of the glass, and inverted in every respect.

For *fig.* 36, let RP be placed where it will before the convex *a*A, its image *rp* will be on the contrary side. And if *rp* be an object, its image RP will be on the contrary side, till *rp* comes to *f*, and then RP will be infinitely distant. But when it is between *f* and C (*fig.* 35.) as at *q*, the image RP is on the same side. Or if RP be the object, then the image *rp* is on the same side, but inverted; because the object and image are on different sides of the center, where the rays cross. And if the object PR be moved to an infinite distance, the image *pr* will be moved to *f*, still on the same side of the glass.

Cor. 1. *If the center is between the object and image, they either both approach to it, or both fly from it. And if the speculum be between them, they either both approach the speculum, or both fly from it.*

For (*fig.* 35.) when C is between Q and *q*, the greater CQ is, the greater is C*q*. And (*fig.* 36.) when V is between them, the greater VQ is, the greater is V*q*.

Cor. 2. *As an object moves from the glass on the convex side to an infinite distance, its image moves from the glass to the principal focus. And as the object moves from an infinite distance on the concave side, to the center, the image moves from the principal focus*

Fig. 35. 36. *to the center also, where they meet. And further, if the object moves from the center to the principal focus; the image moves from the center, the contrary way, to an infinite distance. And as the object moves from the principal focus to the vertex, the image moves from an infinite distance on the convex side to the vertex also, where they meet again.*

For (*fig.* 36.) whilst the object moves thro' VQ, the image moves thro' V*q* to *f*. And (*fig.* 35.) whilst the object moves thro' QC, the image moves thro' *f*C. Also whilst the object moves thro' C*f*, the image moves thro' CQ to an infinite distance; and (*fig.* 36.) whilst the object moves thro' *f*V, the image moves from an infinite distance thro' QV.

Cor. 3. *Tho' the object be removed to an infinite distance, from a convex glass, yet the image will only recede to the distance of half the radius, and will there remain.*

Cor. 4. *The image is upright or inverted, according as the image and object are on the same or different sides of the center.*

PROP. XIX.

To see the image of an object made by any spherical speculum; the eye must be placed in the diverging rays, at a proper distance for distinct vision, and facing the image.

For to see the image, one must look at it, as one would do at any visible object. And therefore in order to be seen, the rays must diverge from it to the eye placed at a proper distance. Thus to see the image *pr* (*fig.* 35.) reflected from the concave speculum A*a*, the eye must be placed somewhere in the line *q*CQ. But if PR was the image (of the object *pr*), the eye must be placed beyond Q. Again (*fig.* 36.) to see the image *rq*, reflected by

by the convex speculum A*a*, the eye must be placed without the glass in the line VQ. But if *rp* is an object, and RP its image, then the eye must be placed in the line VC, on the concave side. The focus Q being only a virtual focus, to which the rays only tend to, but never reach. Fig. 35. 36.

Cor. 1. *If the eye be placed near the speculum, in the converging rays, before they reach the image; it will perceive the image (of the object) beyond the glass, at the same distance nearly as the object is before it; and of the same magnitude.*

For the eye being near the glass, that small part of it which reflects rays to the eye, may be taken for a plane, and therefore the image will appear, as in a plane speculum, at the distance of the object behind it. But the rays that come to the eye placed beyond the image, do not fall upon the eye in the same manner; for they all diverge from points very near the eye.

Cor. 2. *If an image be looked at, with both eyes placed very near it, and in the diverging rays; (or else it cannot be seen at all); it will appear double.*

For the axes of the eyes cannot both be directed to an object extremely near; and the case is the same in all objects near hand, as well as this image.

Cor. 3. *Tho' an eye cannot see an image in the air, except it be placed in the diverging rays; yet if that image be received on a white paper, it may be seen in any position of the eye.*

For the rays reflected from the glass, to the image and beyond it, flow but in that one direction. But when the image is received on a white paper, the paper reflects them in all directions, wherever the eye is placed.

Cor. 4. *If the eye be moved whilst it views the image, the image will appear to be moved.*

For

Fig. 35. 36. For rays from different points of the spherical reflector, will come successively to the eye.

PROP. XX.

35. *If an object rp be placed in the principal focus of a concave reflector; its apparent magnitude to the eye, at any place whatever as* O, *will be invariably the same; and equal to the apparent magnitude to the naked eye, when seen from* C *the center of the speculum.*

Here RP the image will be at an infinite distance. And (by Cor. 1 and 3, Prop. VI.) all the rays of the pencil *r*BV will be reflected parallel to one another, and to the axis *a*C passing thro' the center of the speculum; and therefore the angle VOB, which is the apparent magnitude of the image to the eye at O, is equal to the angle V*Ca* or V*Cr*, which is the apparent magnitude of *rq* to an eye at C. And this is so, wherever O is, or the place of the eye.

Cor. 1. *Hence the apparent magnitude of a body placed in the principal focus, will always continue the same, however the eye is moved backward or forward from the reflector.*

Cor. 2. *The nearer the eye is to the speculum, the more of the object appears; and the further off, the less.*

For rays parallel to C*r* or BO, that lye beyond O (in respect to C), cut the reflector in points beyond B, and at last will miss the reflector, and then the point *r* cannot be seen there.

Cor. *If the object be nearer than the principal focus, its apparent magnitude grows less in going from the speculum. If it be further off, it encreases.*

For

For if the object be nearer, the image is beyond the speculum, and then OB, C*r* (converging to a point beyond the speculum), makes the angle BOC less than *r*C*q*. But if the object is further off, than the principal focus, the image is on the same side; and then the rays converging to a point beyond O, makes the angle BOV greater than *r*C*q*. Fig. 35.

SCHOLIUM.

Some other phœnomena of concave reflectors, are these that follow.

1. The apparent magnitude of an object will be invariable, wherever it is placed, when the eye is at the principal focus.

2. When the eye is fixt at a less distance than the principal focus; as the object is moved from the speculum, the apparent magnitude decreases.

3. When the eye is fixt at a greater distance; the apparent magnitude of an object in going from the speculum increases, till it comes to the conjugate focus (of the place of the eye), and then it is infinite, and all confusion. And afterwards it diminishes again, and is inverted.

4. A man's face in a reflecting concave, in going from it, decreases to the principal focus, and then increases.

PROP. XXI.

The brightness of the image pr formed by the reflecting concave AB, *from the luminous object* PR, *is as* $\frac{AB^2}{Vq^2}$, *or as the area of the lens directly, and the square of the distance of the image reciprocally.* 35.

For if the brightness of the object be given, the quantity of light reflected from the speculum to the image, will be as the magnitude of the object and of the reflector directly, and the square of the distance

Fig. 35. distance reciprocally. Whence the light falling on the image is as $\frac{PR^2 \times AB^2}{QV^2}$; also the density of the light, or the brightness of the image is as the quantity of light directly, and the area of the image reciprocally, or as $\frac{PR^2 \times AB^2}{QV^2 \times pr^2}$. But since PR, pr are parallel, and (Prop. XV.) the angle PVR $= pVr$, &c. PR : pr : : QV : qV, and $\frac{PR^2}{QV^2} = \frac{pr^2}{qV^2}$. Therefore the brightness of the image is as $\frac{pr^2 \times AB^2}{qV^2 \times pr^2}$ or $\frac{AB^2}{qV^2}$.

Cor. 1. *If the brightness of the object be increased in any ratio, which call* B; *the brightness of the image will then be as* $\frac{AB^2}{qV^2}$ B.

Cor. 2. *In very remote objects, if f be the principal focal distance; then the brightness of the image will be as* $\frac{AB^2}{ff}$ B.

For then Vq becomes equal to f.

Cor. 3. *The brightness of the image increases as the area of the glass increases; but its distinctness decreases upon that account.*

For the rays further from the vertex are reflected to different points of the axis, as appears from the different proportions in Prop. III. and V.

PROP.

Fig.

PROP. XXII.

If a concave speculum A*a be held directly to the rays of the sun; and any combustible body be held in the principal focus f, it will be fired by the heat thereof.* 35.

For all the rays of the sun are reflected into the focus, forming there, by reflexion, the image of the sun. Which image must be of an intense heat, because all the rays that fall upon the speculum, are brought thither. And the broader the speculum is, the more rays are contained in that small space; and may be so increased by the breadth of the glass, as to burn or melt all sorts of bodies placed there; as is plain from numerous experiments.

Cor. 1. *The heat generated in the focus of the glass, is to the sun's direct heat; as the area of the glass, is to the area of the image in the focus.*

For the rays that fell upon the glass are all brought into that space, where their density is reciprocally as the areas they are contained in.

Cor. 2. *The degrees of heat in different reflectors, are as the squares of the diameters directly, and the squares of the focal distances reciprocally.*

For the density of the rays in each, are in that proportion.

SCHOLIUM.

Upon account of the rays meeting in that point, and burning bodies therein, it is called the *focus* or *burning point*; and the reflector itself a *burning concave*. For a reflector to burn the most intensly, see Schol. Prob. V. B. IV.

PROP.

Fig.

PROP. XXIII.

37. *If parallel rays* RA, CV, *are reflected from a concave (or convex) spherical surface* A*a*, *of a small hight* VP. *Let* F *be the focus of the extreme ray* AF, Q *the principal focus. Then the aberration of the rays, in the length of the axis* VC, *is equal to half the hight of the segment*; QF $= \frac{1}{2}$VP, *nearly.*

For draw the tangent AT. Then by the nature of the circle CP : CV : : CV : CT. And dividing, CP : CV : : CV — CP (VP) : CT — CV (TV). But VP being very small, CP is = CV nearly, therefore VP = VT. But (Prop. IV.) TF = FC, or CF $= \frac{1}{2}$ CT. And (Prop. VI.) VQ = QC, or CQ $= \frac{1}{2}$CV. Therefore CF — CQ or FQ $= \frac{CT - CV}{2} = \frac{TV}{2} = \frac{VP}{2}$. But (Cor. 4. Prop. IV.) QF is the space on which all the rays fall that come from the whole surface A*a*, that is, QF is the aberration of the rays in length; therefore $\frac{1}{2}$VP is equal to that aberration.

Cor. 1. *The aberration* QF $= \frac{1}{2}$TV *exactly.*

Cor. 2. *The aberration* QF $= \frac{AV^2}{4VC}$, *nearly.*

For VP $= \frac{VA^2}{2VC}$, and $\frac{1}{2}$VP $= \frac{VA^2}{4VC}$.

Cor. 3. *The lateral aberration at the principal focus is* $= \frac{VA^3}{2VC^2}$, *nearly.*

For the triangles APF, DQF are similar, whence PF : PA : : FQ : QD; that is, $\frac{1}{2}$CV : AV : : $\frac{VA^2}{4CV}$: QD $= \frac{VA^3}{2VC^2}$, nearly; because AV is very small.

Cor.

Cor. 4. *The radius of the sphere being given; the aberrations in length, are as the squares of the diameters; and the lateral aberrations, as the cubes of the diameters of the reflectors.* Fig. 37.

PROP. XXIV.

If parallel rays RA, SG, *are reflected from a concave (or convex) spherical surface* A*a*; *the diameter of the least circle of aberration of the rays, is* $\frac{1}{4}$ *the aberration made at the principal focus.* BI $= \frac{1}{4}$QD. 38.

Let any reflected ray GB cut the axis in L, and the extreme ray AF in B. Draw BI perp. to VQ, Q being the principal focus. Then supposing the ray AFD to be fixed; as the point of incidence G moves from the vertex V, the perpendicular BI, will first increase, because the angle VLG continually increases; and afterwards it will decrease, because the line FL continually decreases. And when BI is the greatest, it is plain, all the rays, on the same side, will pass thro' it; and then the circular section of all the rays, in that place I, will be the least section possible. To find the point I, or the radius BI.

By similar triangles, LI : BI : : LP or FP : PH,
and BI : FI : : AP : PF.
and ex equo LI : FI : : AP : PH.
and compounding LI + FI (FL) : FI : : AP + PH (AH) : PH.
Again QF : QL : : AP^2 : PH^2 (by Cor. 4. Prop. 23.)
and by division, QF : QF — QL (FL) : : AP^2 : $AP^2 - PH^2$ (AH × H*a*).
but we had FL : FI : : AH PH
therefore QF : FI : : $AP^2 \times AH$: $PH \times AH \times Ha$.
or QF : FI : : AP^2 : $PH \times Ha$.
but we had FI : BI : : FP : AP
therefore QF : BI : : $AP^2 \times FP$: $AP \times PH \times Ha$
or QF : BI : : $AP \times FP$: $PH \times Ha$.

But

Fig. 38. But QF, AP, FP are given; therefore BI is the greatest when $PH \times Ha$ is the greatest, that is, when $PH = Ha$, $= \frac{1}{2}AP$, and then $PH \times Ha = \frac{1}{4}AP^2$. And since $AP^2 : PH \times Ha\ (= \frac{1}{4}AP^2) :: QF : FI\ (= \frac{1}{4}FQ)$, and consequently $BI = \frac{1}{4}QD$.

Cor. 1. *If* R *be the radius of the reflector,* B = *half its breadth; then the diameter of the least circle of aberrations caused by the figure of the spherical reflector, will be* $\frac{B^3}{4RR}$.

For (Cor. 3. Prop. 23.) $QD = \frac{VA^3}{2RR} = \frac{B^3}{2RR}$, and $2BI$, or $\frac{1}{2}QD = \frac{B^3}{4RR}$.

Cor. 2. *The distance* FI *of the least circle of aberrations from* F *the focus of the extreme ray, is* $\frac{1}{4}$ FQ, *or* $\frac{1}{4}$ *the distance from the principal focus.*

Cor. 3. *If this circle of aberrations be set in any other place, all the rays will not pass thro' it.*

Cor. 4. *And therefore the circular section cutting all the rays, will be greater at any other place, besides* I.

Cor. 5. *The area of the circle of aberrations, is to the area of the glass; as* VA^4 *to* $64R^4$. R *being the radius of concavity.*

For the area of the glass, is to the area of the circle; as VA^2 to BI^2, or as VA^2 to $\frac{B^6}{64R^4}$; or as $64R^4$ to B^4; B being = VA.

PROP.

Fig.

PROP. XXV.

Let R *be the radiant point,* F *the focus of the rays falling at* A, *f the focus of those falling at* V. C *the center of the reflector. Then will* $FC = \frac{CR \times CA^2}{AR^2 - CR^2}$, *and* $fC = \frac{CR \times CA}{VC + 2CR}$. *And the aberration in length is* $= FC - fC$. 39.

Let radius CA or $CV = r$, $AR = a$, $CR = d$, $AF = z$, $FC = y$, Then (Geom. II. 25.) $a : d :: z : y$, and $dz = ay$, and $z = \frac{ay}{d}$. Also (Geom. II. 26.) $rr + dy = az$, and $z = \frac{rr + dy}{a} = \frac{ay}{d}$. Whence $drr + ddy = aay$, and $\overline{aa - ad} \times y = drr$, and $y = \frac{drr}{aa - dd}$.

Again (Prop. V.) $VR\ (r + d) : Vf\ (r - fC) :: CR\ (d) : Cf$. And by composition, $r + 2d : d :: r : Cf = \frac{dr}{r + 2d}$. And the aberration $= \frac{drr}{aa - dd} - \frac{dr}{r + 2d}$.

Cor. 1. *On the contrary, if* F *be the radiant point,* R *the focus of rays falling on* A, *r the focus of rays falling on* V; C *the center of the reflector. Then will* $CR = \frac{CF \times CA^2}{AF^2 - FC^2}$, *and* $Cr = \frac{CF \times CA}{VC - 2CF}$. *And the aberration* $Rr = Cr - CR$.

For from the equations $dz = ay$, and $rr + dy = az$, we have $a = \frac{dz}{y} = \frac{rr + dy}{z}$, and $dzz = rry + dyy$. Whence d or $CR = \frac{rry}{zz - yy}$

Fig. 39. Again (Prop. V.) FV $(r - y)$: FC (y) : : Vr $(r + Cr)$: Cr. By division, $r - 2y : y :: r : Cr = \frac{ry}{r - 2y}$. Therefore $Cr - CR = \frac{ry}{r - 2y} - \frac{rzy}{zz - yy} = Rr$.

Cor. 2. *If* R *and* F *are conjugate foci, for rays falling at* A; *then* R *and* f, *also* r *and* F, *will be conjugate foci for rays near the axis at* V. *And* f *and* r, *will be further from the vertex than* F *and* R.

That f and r are further from the vertex, will appear thus. AC + CR is greater than AR; that is, VC + CR or $r + d$ is greater than a, and $rr + 2rd + dd$ greater than aa, and $rr + 2rd$ greater than $aa - dd$. Whence $\frac{drr}{aa - dd}$ is greater than $\frac{drr}{rr + 2rd}$ or $\frac{dr}{r + 2d}$; that is, FC is greater than fC.

Again, AF + FC is greater than AC or VC, or VF + FC, and AF greater than VF; that is, z is greater than $r - y$, and zz greater than $rr - 2ry + yy$, and $zz - yy$ greater than $rr - 2ry$. Therefore $\frac{rry}{rr - 2ry}$ or $\frac{ry}{r - 2y}$ is greater than $\frac{rry}{zz - yy}$; that is, Cr is greater than CR.

Cor. 3. *Therefore if* R, f *be conjugate foci to the vertex* V; R *and* F, *will be conjugate foci to the point* A. *And if* F *and* r *be conjugate foci to the vertex* V; *then* F *and* R *will be conjugate foci to the point* A.

Cor. 4. *Let* F, r, *be the conjugate foci to the vertex* V; *then the aberration* $Rr = \frac{VP \times rC \times 2CF}{CV^2 - 2CF \times CP}$, *for rays falling at* A.

For

For let $x = \text{VP}$, $v = r - 2y$; and $rr = yy + zz + 2y \times \text{FP}$; and $zz = rr - yy - 2y \times \overline{r - y - x}$, and $zz - yy = rr - 2ry + 2yx. = rv + 2yx.$ Fig. 39.

Then $\text{R}r = \frac{ry}{r - 2y} - \frac{rry}{zz - yy} = \frac{ry}{v} - \frac{rry}{rv + 2yx}$

$= \frac{ry}{v} - \frac{ry}{v + \frac{2yx}{r}} = \frac{vry + 2yyx - vry}{v \times \overline{v + \frac{2yx}{r}}} =$

$\frac{2yyx}{v \times \overline{v + \frac{2yx}{r}}} = \frac{x \times \frac{y}{v} \times 2y}{v + \frac{2yx}{r}} = \frac{x \times \frac{ry}{v} \times 2y}{rv + 2yx} =$

$\frac{x \times \frac{ry}{r - 2y} \times 2y}{rr - 2ry + 2xy} = \frac{\text{VP} \times \text{C}r \times 2\text{CF}}{\text{CV}^2 - 2\text{CF} \times \text{CP}}.$

Cor. 5. *If* T *be the principal focus. And let* $\text{TF} : \text{TC} :: 1 : n$; *then the aberration* $\text{R}r = \frac{\overline{n - 1} \times \text{VP} \times \text{VT}}{\frac{\text{VC}}{n - 1} + \text{VP}}.$

For by division $\text{TF} : \text{TC} - \text{TF}$ or $\text{FC} :: 1 : n - 1$; that is, $\frac{1}{2} r - y : y :: 1 : n - 1 = \frac{y}{\frac{1}{2}r - y} = \frac{2y}{r - 2y}$, and $\frac{r \times \overline{n - 1}}{2} = \frac{ry}{r - 2y}$. And

(Cor. 4.) $\text{R}r = \frac{x \times \frac{ry}{r - 2y} \times 2y}{rr - 2ry + 2xy} = \frac{x \times \frac{r \times \overline{n - 1}}{2} \times 2y}{rr - 2ry + 2xy}$

$= \frac{\overline{n - 1} \times \frac{1}{2} rx}{\frac{rr - 2ry}{2y} + x} = \frac{\overline{n - 1} \times \frac{1}{2} rx}{\frac{r}{n - 1} + x}$; because $n - 1$

$= \frac{2y}{r - 2y}$, and $\frac{r}{n - 1} = \frac{rr - 2ry}{2y}$.

Fig.

PROP. XXVI.

40. *If* R *be the radiant point,* F *the focus of rays falling on* A, *and reflected by the convex speculum* AV, *whose center is* C, *f the focus of rays falling on* V. *Then will the aberration* $Ff = \frac{RC \times CA^2}{RC^2 - RA^2} - \frac{RC \times CA}{2RC - CV}$.

Draw RH parallel to the reflected ray AG, and RO perp. to CA produced. Then $\angle H = FAC = CAS = RAH$, and consequently $RH = RA$, and $AO = OH = \frac{1}{2} AH$. Let CA or CV $= r$, $CR = d$, RA or RH $= a$, $CF = y$, $AF = z$, $AO = v$, $VP = x$.

Then in the triangle RCA, (Geom. II. 22.) $dd = aa + rr + 2vr$, and $dd - aa = rr + 2vr = \overline{r + 2v} \times r$. And by the similar triangles CFA, CRH, CR (d) : CF (y) : : CH $(r + 2v)$: CA (r) : : $\overline{r + 2v} \times r : rr$: : $dd - aa : rr$. Whence $y = \frac{drr}{dd - aa} = CF$.

Also (Prop. V.) VR $(d - r)$: Vf $(r - Cf)$: : CR (d) : Cf. And compounding, $2d - r : d$: : $r : Cf = \frac{dr}{2d - r}$. And $Ff = CF - Cf$.

Cor. 1. *If* R, *f be the conjugate foci, to the vertex* V; *then for rays falling on* A, *the aberration* $Ff = \frac{Cf \times VP}{\frac{CV^2}{2Cf} - VP}$; *f being the focus of rays falling at* V.

For (Geom. II. 23.) $CP = \overline{r - x}$, and C being an acute angle, we have in the triangle RAC, $aa = rr + dd - 2d \times \overline{r - x}$, and $dd - aa = 2dr -$

2dx

$2dx - rr$. Therefore $Ff = \frac{drr}{2dr - rr - 2dx} - \frac{dr}{2d - r} = \frac{drr}{2dr - rr - 2dx} - \frac{drr}{2dr - rr} = \frac{2dr - rr - 2dr + rr + 2dx}{2dr - rr - 2dx \times 2dr - rr} drr = \frac{2drx}{2dr - rr - 2dx \times 2dr - rr} dr = \frac{\frac{dr}{2d - r} \times x}{2dr - rr - 2dx} \times 2d = \frac{\frac{dr}{2d - r} \times x}{\frac{2d - r}{2d} r - x} = \frac{\frac{dr}{2d - r} x}{\frac{2d - r}{dr} \times \frac{1}{2} rr - x} = \frac{Cf \times x}{\frac{rr}{2Cf} - x}$. Fig. 40.

Cor. 2. *Let* T *be the principal focus, and* CT *or* TV $= t$. *And let* TR : TV : : m : 1. *Then the aberration* $Ff = \frac{\frac{m+1}{m} tx}{\frac{m}{m+1} \times 2t - x}$.

For TR $(d - \frac{1}{2} r)$: TV $(\frac{1}{2} r)$: : m : 1, or $2d - r : r : : m : 1$, and by addition $2d : r : : m + 1 : 1$. Hence $m = \frac{2d - r}{r}$, and $m + 1 = \frac{2d}{r}$, therefore $\frac{m+1}{m} = \frac{2d}{2d - r}$, and $\frac{m+1}{2m} r = \frac{dr}{2d - r} = Cf$. Whence $\frac{Cf \times x}{\frac{rr}{2Cf} - x} = \frac{\frac{m+1}{2m} rx}{\frac{rr}{2} \times \frac{2m}{m+1 . r} - x} = \frac{\frac{m+1}{m} \times \frac{1}{2} rx}{\frac{m}{m+1} \times r - x} = \frac{\frac{m+1}{m} tx}{\frac{m}{m+1} \times 2t - x}$.

Fig.

PROP. XXVII.

41. *Let* R *be the radiant point,* RA *the incident ray falling upon the spherical surface* AV, AD *the reflected ray,* C *the center of the reflector; draw* CB, CD *perp. to* RA, AD. *And let* T, *t, be the middle points of* AB, AD. *Then if* F *be the focus of the reflected ray, it will be as* RT : TA : : TA *or* tA : tF. *Where* F *must lie the same way from* t, *as* R *lies from* T.

Let Ra be another ray infinitely near RA; aFd its reflected ray; draw Cb, An perp. to Ra; and Cd, As perp. to Fa. Then the right angled triangles Aas, and Aan are equal and similar; for $<$ naA = FaV = SaA, and Aa is common, therefore As = An. Also in the equal right angled triangles ACB, ACD; and also aCb, aCd; CB = CD, and Cb = Cd, therefore Bb = Dd. And by the similar triangles RBb, RAn; and FAs, FDd; RB : RA : : Bb or Dd : An or As : : FD : AF. And by composition and division, RA + RB : RA — RB : : AF + FD : AF — FD. And $\frac{RA + RB}{2} : \frac{RA - RB}{2} :: \frac{AF + FD}{2} : \frac{AF - FD}{2}$. That is, RT : TA : : A$t$: tF.

Cor. 1. *This Prop. holds true of any curve* AV, *whose radius of curvature at* A, *is* AC.

Cor. 2. RA : RB : : AF : FD.

Cor. 3. T *and* t *are the foci of rays parallel to* RA, FA.

Cor. 4. *The middle point of* CA *is the focus of rays parallel to* CA.

Cor.

Cor 5. *If rays fall on the convex side, it is only putting* R *on the other side of* AV; *and the same proportion holds good.* Fig. 41.

SCHOLIUM.

Altho' it appears by Prop. IX, and X. that a conic section will reflect all rays issuing from one focus, accurately to the other focus; and therefore mathematicians have endeavoured to grind their glasses into the form of some of the conic sections, yet they have never succeeded in giving them a true figure, nor has any method yet been found out to grind them accurately into that form. And if they could, it would not answer their expectation; for neither the conic sections, nor any other curve, will reflect the rays issuing from any point in the collateral parts of an object, accurately to a single point. So that if glasses were truly made in the form of any of the conic sections, they would not perform much better than those of a spherical form. For near the vertex of a conic section, it nearly coincides with a sphere of a certain radius, and therefore in a small segment, they will nearly reflect alike. And spherical glasses are easily ground into a true form. And therefore considering all things, a spherical surface is the best curve, and the most commodious for optical uses of any.

BOOK III.

DIOPTRICS, *or refracted Vision.*

DEFINITIONS.

DEFIN. I.

Fig. DIOPTRICS is that part of Optics, which treats about refracted light, and every thing that relates to seeing thro' different mediums, and the pictures of objects made by refraction through them.

DEF. II.

43. *A Lens* is a solid transparent body as AB, generally of glass, being of such a shape, that the sides of it are either flat, or the segments of spherical surfaces. Of these there are several sorts, as, 1. *Plain* on both sides. 2. *Plano convex*, being plain on one side and convex on the other. 3. *Plano concave*, or plane on one side and concave on the other. 4. *Double convex*, being convex on both sides. 5. *Double concave*, being concave on both sides. 6. A *Meniscus*, being convex on one side, and concave on the other.

DEF. III.

The *Axis* of a lens, is a right line perpendicular to both the surfaces, or passing thro' both their centers.

DEF. IV.

The *Vertex* is the point where the axis cuts the surface of the lens.

PROP.

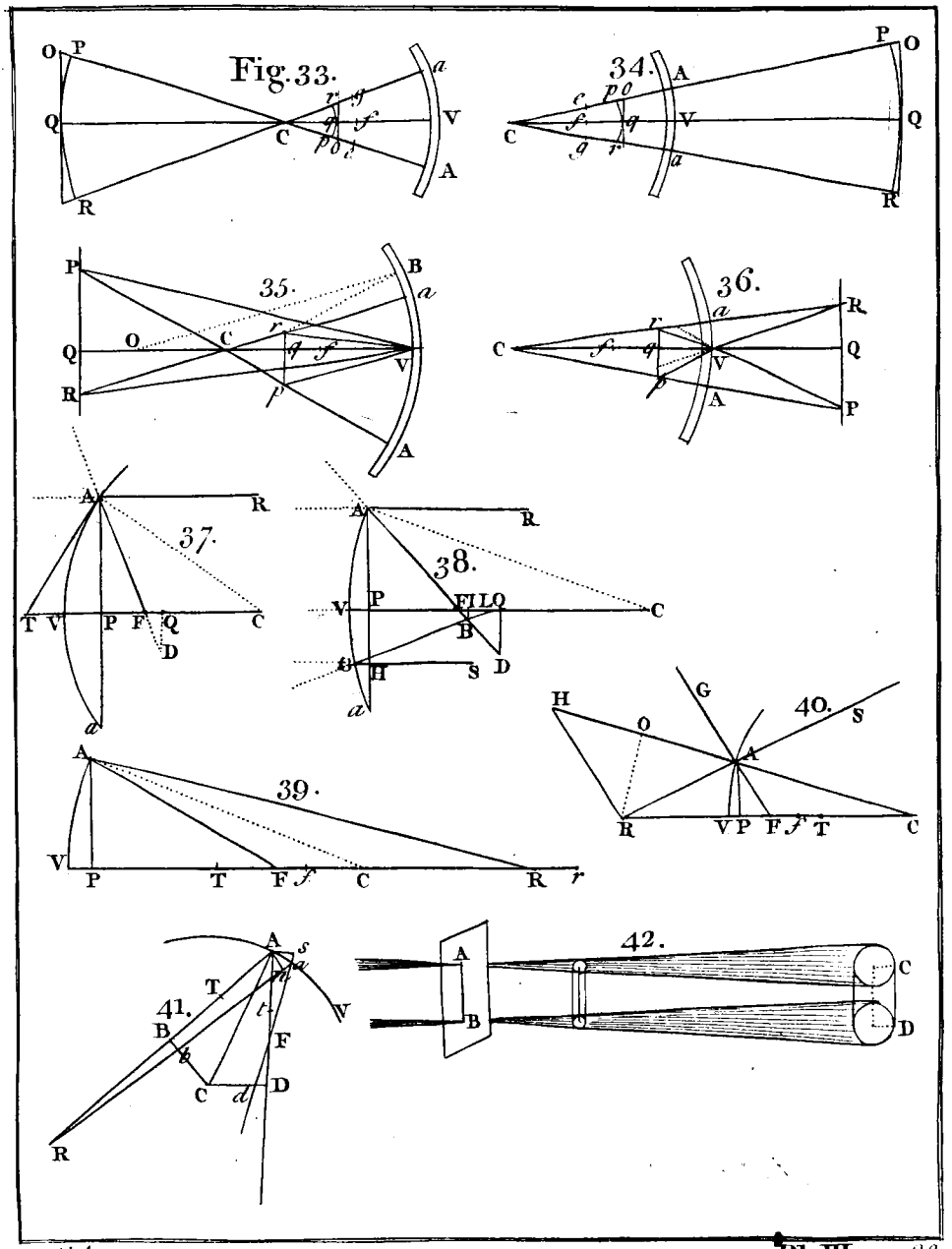
Fig. 33.
34.
35.
36.
37.
38.
39.
40.
41.
42.

Fig.

PROP. I.

If a ray of light AC, *paſs into a refracting medium; the ſine of incidence* ACD, *is to the ſine of refraction* ECF, *in a conſtant ratio.* 44.

Let the ray BC falling moſt obliquely on the refracting medium MS, be refracted in the line CN. And the ray ACI be refracted into the line CE. Draw AP perp. to MS, and make, CH = CP, and CL = CM. And draw HIE and LN perp. to CS. And let the equal lines BC, AC, repreſent the equal motions of the rays B and A. Then ſuppoſing BC parallel or nearly coinciding with the refracting plane; let the motion AC be reſolved into the two motions, AP, PC; AP being perpendicular, and PC parallel to the refracting ſurface.

Then (by Prop. XVI. B. I.) bodies act upon light by the forces of attraction and repulſion; and theſe forces are directed in lines perp. to the ſurface of the refracting body MS. Therefore the motions of the rays BC, PC which are parallel to MS, ſuffer no alteration by the refraction of the medium. Therefore in the very ſame time that the rays A and B move to C, they would move to I and L without refraction, where CL = CB = CA = CI. But by the refraction of the medium, that from B goes to N, and that from A goes to E, in the perpendiculars LN, HE, becauſe the parallel motion is the ſame as before. But (by Cor. 3. Prop. XX. Mechan.) the velocities of the rays A, B, which were equal before refraction, will alſo be equal after; and therefore CN = CE.

Now in the right angled triangle CLN, we have S.CLN (MCD) : : S.CNL (NCF) : : CN : CL : : CE : CI : : (in the triangle CEI) S. CIH (ACD):

Fig. 44. (ACD) : S.CEH (ECF). That is, S.ACD the angle of incidence : S.ECF the angle of refraction : : rad : S.NCF, or in a given ratio.

Cor 1. *If the refracted ray* EC *be turned directly back to the point of incidence; it will be refracted into the line* CA, *before described by the incident ray.*

For the forces that before accelerated its motion, will now equally retard it.

Cor. 2. *The angles of incidence and refraction lye both in one plane, which is perp. to the refracting surface at the point of incidence.*

For the refraction being made in lines perp. to the refracting surface, there is no force to cause the rays to deviate from that plane.

Cor. 3. *Heterogeneal rays of light have different degrees of refraction; but in any one considered by itself, the sine of incidence is in a given ratio the sine of refraction.*

Cor. 4. *If* AC *be the incident ray, and* CE *the refracted ray; and if* AC *produced cut the perpendicular* HE *in* I. *Then* CE : CI : : *as sine of the angle of incidence : to the sine of the angle of refraction.*

Cor. 5. *The velocity of light in the first medium* ADC, *is to its velocity in the second medium* CFN; *as the sine of the angle of refraction, to the sine of the angle of incidence.*

For it is as AC *or* CI *to* CE.

Cor. 6. *If parallel rays pass out of one medium into another, they will also be parallel after refraction: the refracting surface being a plane.*

For the rays being parallel, they are equally refracted.

PROP.

Fig.

PROP. II.

If heterogeneal light be refracted out of glass into air; the sine of incidence, is to the sine of refraction of the least, and most refrangible rays; as 50 to 77 and 78.

This is proved by experiment thus; take a glass prism BCD, with a very acute angle C, and place it so, that a ray of the sun AF coming thro' a small hole in the window shut, near the prism, may fall perpendicularly upon the side DC, and be refracted by the opposite side at Y, the most refrangible rays to P, and the least refrangible to T. Then if EYG be perpendicular to the side CB, by measuring the angles AYE, TYG and PYG, the sines of these angles will become known. 45.

For example, if the angle of the prism BCD be 31° 36′; then since the triangles CFY and CYE are both of them right angled, the angle BCD = FYE the angle of incidence at Y = 31 36, whose sine is .524. And the angles TYG and PYG will be 53 36, and 54 44 $\frac{1}{2}$; whose sines are .805 and .8165. But .524 and .805 and .8165 are nearly to one another as 50, 77 and 78.

Here the angle of incidence on the plane BC is always equal to the angle of the prism BCD; but it may be difficult to measure the angles TYG and PYG truly, for want of drawing the perpendicular YG exactly. Therefore to avoid any error, take the altitude of the sun, and at the same time mark the points P, T. Then to the altitude of the sun, add the angle of the prism, which was shewn to be equal to FYE; the sun gives the elevation of the perpendicular YG above the horizon. Then if you take also the elevation of TY, PY above the horizon; these taken from the elevation of GY, will give the angles TYG, PYG.

Cor.

Fig. 45. Cor. 1. *The angle* PYT, *which the coloured image subtends, is about* $1^\circ\ 8'\frac{1}{2}$, *or* $1^\circ\ 9'$, *subtracting the sun's diameter.*

Cor. 2. *In the coloured image* PT, *the lengths of the several colours, red, orange, yellow, green, blue, purple, violet, are found to be* $\frac{1}{16}, \frac{3}{80}, \frac{1}{15}, \frac{1}{12}, \frac{1}{12}, \frac{1}{18}, \frac{1}{9}$; *it is easy to divide the angle* PYT *in that proportion; and then there will be had the sines of refraction at the confines of all the colours; that is,* 77, $77\frac{1}{8}$, $77\frac{1}{5}$, $77\frac{1}{3}$, $77\frac{1}{2}$, $77\frac{2}{3}$, $77\frac{7}{9}$, 78.

For the image is divided after the manner of a musical cord, as Sir J. Newton has found. And in small arches, the differences of the sines are nearly as the differences of the arches.

Cor. 3. *If light pass out of glass into air; the sine of incidence, is to the sine of refraction of the mean rays; as* 11 *to* 17, *or as* 20 *to* 31; *which is a greater refraction than as* 2 *to* 3.

For the mean refrangible rays are those at the confines of the blue and green, or nearer the green, whose refraction is $77\frac{1}{4}$ or $77\frac{1}{2}$.

SCHOLIUM.

By a like experiment, the sine of incidence and refraction of the least refrangible rays out of water into air is as 3 to 4, or as 81 to 108; and of the most refrangible, as 81 to 109.

PROP.

Fig.

PROP. III.

If A, B, C, *be three refracting mediums, contained between parallel surfaces; and if a ray of light* DE *passing thro' them be refracted at* E *and* F, *and pass thro' the third in direction* FG. *It will suffer the same refraction by passing thro'* A, B, C, *as if it went immediately out of* A *into* C. 46.

For let the medium C approach the medium A in direction FE, and the medium B grow thinner and thinner, till F fall upon E, and the medium B be vanished; all this makes no difference in the position of the line FG. And therefore the refraction into the medium C will be the same whether the ray pass thro' B, or goes immediately from A to C, without coming into B at all. And the same likewise appears from experiments.

Cor. 1. *Hence if there be never so many refracting mediums contained between parallel surfaces; the whole refraction of a ray is the same at last, in passing thro' all of them; as it would be in passing immediately out of the first into the last.*

Cor. 2. *If several mediums* A, B, C, *terminated by parallel planes, be encompassed on all sides by some other medium; any ray* RD *moving out of this other medium, and passing thro' all the rest, will emerge parallel to itself, at coming into this other medium again; that is,* GS *will be parallel to* RD.

For the refraction is the same as if all the mediums A, B, C were away; and GS has the same direction as RD.

PROP.

Fig.

PROP. IV.

47. *If* A, B, C *be three mediums, and the sines of incidence and refraction out of* A *into* B, *be a and b; and out of* A *into* C, *be a and c; then those out of* B *into* C, *will be b and c.*

Let the mediums B and C be encompassed by the medium A; and let RD be a ray refracted at D, F, and G, and proceeding to K. Then (Prop. III. Cor. 2.) GK will be parallel to RD. At D, F, G, let fall the perpendiculars LDO, NFP, IGH. Then by reason of the parallels GK, RD, and GH, DL, the angle HGK = LDR. Whence a = S.RDL, b = s.ODF = S.DFN = S. incidence of the ray DF on the medium C. Also a = S.HGK, and consequently c = S.FGI = S.GFP = S. refraction of the ray into the medium C. Therefore the sines of incidence and refraction out of B into C, are b and c.

Example. Let A be air, B water, and C glass. And let the sines of incidence and refraction out of air into water be as 4 to 3; and out of air into glass as 17 to 11, or as 4 to $\frac{4 \times 11}{17}$; then $a = 4$, $b = 3$, $c = \frac{4 \times 11}{17}$. Therefore the sine of incidence and refraction out of water into glass will be 3 and $\frac{4 \times 11}{17}$, or as 3×17 to 4×11, or as 51 to 44.

Cor. *If* B, C, D, *be three mediums; and the sine of incidence and refraction out of* B *into* C, *be as b to c; and out of* C *into* D, *as r to s. Then those out of* B *into* D *will be as br to cs.*

For

For by this Prop. the ſines of incidence and refraction out of C into B are as c and b; and out of C into D, as r to s, or as c to $\frac{cs}{r}$. Therefore thoſe out of B into D, will be as b to $\frac{cs}{r}$, or as br to cs. Fig. 47.

Examp. If the ſines of incidence and refraction out of glaſs into air, be as 20 to 31; and out of air into water, as 4 to 3. Then the ſines of incidence and refraction out of glaſs into water, will be as 20×4 to 31×3, or as 80 to 93.

PROP. V.

The forces of bodies to refract light, are nearly as their denſities; excepting that unctious and ſulphureous bodies refract more than others of the ſame denſity.

In uniformly accelerated motion, (by Prop. V. Cor. 2. Mechan.) if the body is given, the velocity is as the force and time; and the ſquare of the velocity, as force $\times$ time $\times$ velocity; that is, (by Cor. Prop. VI. ib.) as the force $\times$ ſpace deſcribed, and that is (when the ſpace is given) as the force. Let AF be the refracting ſurface, and let it be divided into an infinite number of equal parts terminated by parallel planes paſſing thro' A, B, C, D, &c. Put $a =$ AB or BC, &c. f, g, h, &c. for the forces acting in AB, BC, CD, &c. which may be eſteemed uniform. Then the velocities acquired in falling from reſt, thro' AB, BC, CD, will be as $\sqrt{f}$, $\sqrt{g}$, $\sqrt{h}$; and their ſquares as f, g, h. But (by Cor. 3. Prop. XX. Mechan.) the ſquare of the velocity at B being f, the ſquare of the velocity at C is $=$ ſquare of the velocity at B $+$ the ſquare of the velocity in paſſing thro' BC from reſt $= f + g$. And the ſquare of the velocity at D $=$ ſquare of the velocity at C $+$ 49.

Fig. 49. C + the ſquare of the velocity in paſſing thro' CD $= f + g + h$. And ſo on, therefore the velocity at F $= \sqrt{f + g + h \; \&c.}$ = ſquare root of the force.

48. Let AB be the refracting ſurface, IC the incident ray, infinitely near AC, and CR the refracted ray. Let CB = CA, and BR perp. to CB. Then CB (= CI = 1) is the parallel motion of the ray, and BR the perpendicular motion, which is generated by the refraction. And therefore BR is as the ſquare root of the refracting force, as was ſhewn before; and the refracting force is as the denſity, therefore the ſquare of BR is as the denſity of the medium.

Let the ſines of incidence and refraction be as m to n. Then we have $m : n :: CR : CB = 1$, and $CR = \frac{m}{n}$, and $BR^2 = CR^2 - CB^2 = \frac{mm}{nn} - 1$. Therefore in the following table, againſt the names of the bodies in the firſt column, you have the ſines of incidence and refraction in the ſecond, the ſquare of BR or the refracting power in the third, their denſity or ſpecific gravity in the fourth, and their ratio in the fifth column.

Bodies

Fig. 48.

Bodies	Refraction m	Refraction n	Refracting power	Denſity	the Ratio
Pſeudo topaz	23	14	1.699	4.27	0.39
Air	3201	3200	0.000625	0.0012	.52
Glaſs of Antimony	17	9	2.568	5.28	.48
A Selenitis	61	41	1.213	2.252	.54
Glaſs	31	20	1.4025	2.58	.54
Rock Cryſtal	25	16	1.445	2.65	.54
Iſland Cryſtal	5	3	1.778	2.72	.65
Sal Gemmæ	17	11	1.388	2.143	.64
Alumn	35	24	1.1267	1.714	.65
Borax	22	15	1.1511	1.714	.67
Niter	32	21	1.345	1.9	.70
Vitriol	303	200	1.295	1.715	.75
Ol. Vitriol	10	7	1.041	1.7	.61
Rain Water	529	396	0.7845	1.	.78
Gum Arabic	31	21	1.179	1.375	.85
Spt. Wine	100	73	0.8765	0.866	1.01
Camphire	3	2	1.25	0.996	1.25
Oil Olive	22	15	1.1511	0.913	1.26
Linſeed Oil	40	27	1.1948	0.932	1.28
Spt. turpentine	25	17	1.1626	0.874	1.32
Amber	14	9	1.42	1.04	1.36
Diamond	100	41	4.949	3.4	1.45

This table of Sir J. Newton's, made from a great many experiments, ſhews that theſe bodies that differ from a conſtant ratio, are ſuch as abound more or leſs with oily ſulphureous particles. And that ſuch oily ſulphureous ſubſtances have a greater refractive power than others, in proportion as they are of a more ſulphureous nature.

Cor. 1. *The ſquare of* BR *is as the denſity of the medium.*

Fig. 48. Cor. 2. *Refraction out of a thinner medium into a thicker, is made towards the perpendicular; and the contrary.*

Cor. 3. *When light passes out of a thicker into a thinner medium, if the obliquity of the incident ray be so great, that the sine of its incidence has a greater proportion to the radius, than the sine of incidence to the sine of refraction; that is, when the sine of refraction would be greater than the radius, which is impossible. Then the light will not pass into that medium, but be reflected back. And therefore light will not pass out of glass into air, above 42 degrees of incidence; but is reflected back into the glass.*

PROP. VI.

50. *Let* AGFO *be any dense medium,* AE *perp. to* AO, HO *an incident ray, making the angle* HOF *infinitely small,* OB, OC *the refracted rays, being the least and most refrangible. Draw* B*c parallel to* AO, *cutting* OC *in c; thro' c draw ace parallel to* AE; *then in any other dense medium* AGH, *if the least refrangible rays (of the incident ray* HO*) pass to* D; *then drawing* D*e parallel to* AO *to cut ae in e, the most refrangible rays will pass thro' e.*

Let the ray OE cut D*e* in *r*, and if HO or OA be the velocity of the incident ray, then (Prop. I. Cor. 5.) OB, OC, OD, OE will be the velocity of the rays going to B, C, D, E; and (Prop. V. Cor. 1.) $AB^2 : AD^2 ::$ density of the first medium : density of the second : : $AC^2 : AE^2$. And AB : AC : : AD : AE; whence AC : CB : : AE : ED. And by similar triangles, B*c* : AO : : (CB : CA : : ED : EA : :) D*r* : AO; whence D*r* = B*c* = D*e*, and *r* falls upon *e* in the line *abe*. Therefore in all mediums, where the angle of incidence is a right angle, the extreme refracted rays will cut the parallels

rallels AE, *ae*, in the points B, *c*, and D, *e*, making B*c*, D*e* alſo parallel to one another, and to the refracting ſurface OA. Fig. 50.

But this does not hold good when the angle of incidence is not a right angle.

Cor. 1. *If the medium is ſuch, that the mean refrangible rays, are refracted at an angle of* 45° *with* OA, *then the rays will be the moſt diſperſed by refraction.*

For the angle DOE will be greateſt when AO makes 45 degrees with a line drawn from O, biſecting D*e*.

Cor. 2. *It does not hold that the ſines of refraction of the heterogeneous rays, are proportional,* S.B : S.C : : S.D : S.E.

For that proportion in inconſiſtent with this, AB : AC : : AD : AE.

Cor. 3. *Neither does this conſtruction hold good, in one and the ſame medium, for different incidencies.*

For if the heterogeneous rays at incidence 90, paſs thro' B, *c*; at leſs incidencies they will not paſs thro' D, *e*; the line D*e* growing perpetually leſs, as the angle AOD grows bigger. For in this caſe, it is, S.B : S.C : : S.D : S.E, which is inconſiſtent with the proportion AB : AC : : AD : AE, on which the equality of B*c*, D*e*, depends.

SCHOLIUM.

If the denſe medium AGHA be glaſs, then if OA be 40, A *a* will be 1; as may be calculated from having OA given, and the ſines of incidence and refraction. And this may ſerve for a ſtandard, whereby to meaſure the refractions of other mediums.

Fig.

PROP. VII.

52. *If homogeneal rays be refracted by a prism* ABC, *the inclination of the incident and emergent rays is least, when the refraction is equal on both sides,* APH = BSR.

51. In order to prove this, let the angle $bIg = gId$, and let bI, gI, dI, be three homogeneal rays, passing out of a denser into a rarer medium, and refracted at I, in the lines IB, IG, ID; draw the sines bn, go, dp, and BN, GO, DP. Now it is known, that in small arches, these arches are nearly as their sines, and the increases of the arches as the increases of the sines; but as the arches increase, that increase has a greater ratio to the increase of the sine; and still greater and greater as the arches become bigger. Now since the sines bn, go, dp have a given ratio to BN, GO, DP, and their increments to their increments. And since AB is greater than ab, therefore, putting *inc.*OG for increase of OG, &c. we have $\frac{dg}{inc.og}$ greater than $\frac{bg}{inc.nb}$ or $\frac{dg}{inc.nb}$, and *inc.nb* greater than *inc.og*. And $\frac{DG}{inc.OG}$ much greater than $\frac{BG}{inc.NB}$, that is, $\frac{DG}{inc.og}$ much greater than $\frac{BG}{inc.nb}$, and $inc.nb \times DG$ much greater than $inc.og \times BG$. Divide by *inc.nb*, and *inc.og* (which are not in so great a ratio), and then DG is greater than BG. Whence the sum of the refractions AB, AD, is greater than twice the refraction AG, into the rare medium.

52. Now let the ray PS be refracted into the lines PH, SR making the $\angle$ APH = BSR. Also let the

the ray PQ be refracted into PI and QL. Draw PON perp. to CA, and QO, SN perp. CB. Produce RS, HP to V, and IP, LQ to T. Then <OPQ + OQP = C = < NPS + NSP = 2NPS, for O and C, or N and C, make two right angles. Therefore the angles OPQ, OPS, and OQP have equal differences, and their angles of refraction are OPT, OPV, and OQT. Therefore, by what was shewn before, OPT + OQT is greater than 2OPV or NPV + NSV; and taking away the equal angles OPQ + OQP = NPS + NSP, and there remains QPT + PQT greater than SPV + PSV, that is, DTQ greater than FVS, and therefore the inclination RVF is less than any other inclination LTD. Fig. 52.

Cor. 1. *The greater the obliquity of the ray* IP *entering into the prism, the greater will be the inclination of the incident and emergent rays,* DTL.

This appears from what was proved in *fig.* 51, where the greater the arch is, the greater is the ratio thereof to the sine.

Cor. 2. *If a prism be placed near the hole in a window shut, for a beam of the sun to pass thro', so as to throw the image upwards; the lowest place of the image where it appears stationary (in turning the prism slowly about), is when the incident and emerging rays make equal angles on each side the prism.*

Cor. 3. *There are two positions of the prism, where the image will have the same place, and that is where the ray passing thro' it, cuts the contrary sides at the same angles.* 53.

For if IPQD be the progress of the ray, and if < CGF : = < CPQ, and CFG = CQP. Then the sum of the refractions of the ray FG, will be equal to the sum of the refractions of the ray PQ. Therefore if the prism be turned about the axis,

Fig. 53. till the angle IPA be equal to DQB; then the ray will pass along FG and go to D, as before it did in going along PQ.

52. Cor. 4. *When the angles of incidence and refraction are equal on both sides the prism; the angle of refraction* NPS *is equal to half the angle* C *of the prism.*

For we proved before that C is equal to 2NPS.

PROP. VIII.

54. *Heterogeneous rays being refracted by a prism* ABC, *the more oblique the incident ray* IP *is, the less will be the separation of the rays* SL, Q*l*.

Instead of a more tedious method of demonstration, I shall compute the progress of the rays trigonometrically, the angle C being 60°, and the sines of incidence and refraction out of air into glass being as 106 to 68 and 69.

1. Let the angle of incidence API be infinitely small, then it will be

106	2.0253059	106	2.0253059
68	1.8325089	69	1.8388491
Rad.	10.	Rad.	10.
S.39 54	9.8072030	S.40 37	9.8135432
the angle OPQ.		the angle OPS.	

These angles taken from (C) 60, leave 20 6, and 19 23 for the angles of incidence at Q and S. Therefore again,

68	1.8325089	69	1.8388491
106	2.0253059	106	2.0253059
S. 20 6	9.5361286	S. 19 23	9.5209899
	11.5614345		11.5462958
S. 32 23½	9.7289256	S. 30 39	9.7074467

30 39
dif. 1 44½ = the angle of dissipation between the rays SL, Q*l*.

2. Let

2. Let *l*Q be the incident ray; then since the most refrangible ray will return thro' *l*QP to I, making the angle API infinitely small. Therefore we have nothing to do, but trace the least refrangible ray thro' *l*QRH. Therefore Fig. 54.

	106 —	2.0253059
	69 —	1.8388491
S.	32 $23\frac{1}{2}$ —	9.7289256
		11.5677747
S.	20 $24\frac{1}{2}$ —	9.5424688

the angle RQO.

Then 20 $24\frac{1}{2}$ taken from 60 leaves 39 $35\frac{1}{2}$ for the angle of incidence at R, or QRO, therefore

	69 —	1.8388491
	106 —	2.0253059
S.	39 $35\frac{1}{2}$ —	9.8043520
		11.8296579
S.	78 15 —	9.9908080

And 78 15 taken from 90, leaves 11 45 for the angle made by RH and PI, for the separation of the rays at P or R, far exceeding that at Q or S.

3. Let the angles at P, Q be equal, being each equal to 60; whence the angle of incidence is 30. Then

	68 —	1.8325089		69 —	1.8388491
	106 —	2.0253059		106 —	2.0253059
	S.30 —	9.6989700		S.30 —	9.6989700
		11.7242759			11.7242759
S.	51 $12\frac{1}{2}$ —	9.8917670	S.	50 11 —	9.8854268

	51	$12\frac{1}{2}$
	50	11
diff.	1	$1\frac{1}{2}$

And 1 $1\frac{1}{2}$ doubled gives 2 : 03 the whole separation by both sides of the prism, when the angles

Fig. 54. at P and Q are nearly equal, and the rays come on any side.

So that when the rays fall very obliquely, the separation of the heterogeneous rays is only 1 44½. When their incidence and emergence are about equal, it is 2 03. And when their incidence is so near a perpendicular, that their emergence is the most oblique, it is 11 45.

PROP. IX.

55. *If* R *be the radiant point,* RP *perpendicular to the refracting plane surface* PA. *Then if* RA *be the incident ray,* AH *the refracted ray, cutting* RP *in* F; *then* F *will be focus, so that* FA : RA : : S.*incidence* : S.*refraction.*

For the angle PRA = angle of incidence, and PFA = angle of refraction, and in the triangle ARF, FA : RA : : S.FRA : S.PFA : : S.angle of incidence : S.angle of refraction.

Cor. 1. *As the sine of refraction : to the sine of incidence : so the incident ray to the refracted ray.*

Cor. 2. *If rays diverging from* R, *diverge from* F, *after refraction; then rays converging to* F *will converge to* R *after refraction.*

Cor. 3. *Parallel rays falling on a refracting plane, are refracted into parallel lines.*

For R and F being at an infinite distance; all rays proceeding from R will be parallel to one another, and all rays proceeding from F will also be parallel.

Cor. 4. *If rays diverging from* R, *diverge from* F *after refraction; then changing the mediums, the rays diverging from* F, *will diverge from* R, *after refraction.*

Cor.

Cor. 5. *If rays* RA, R*a*, *falling near* P, *be re-* Fig.
fracted from the focus F; *then* FP : RP : : S.*inci-* 56.
dence : S.*refraction.*

For then FA = FP, and RA = RP, nearly.

Cor. 6. *If* R *is an object under water, and the* 57.
eye moves from C *to* D *and then to* H, *&c. the object will seem to rise in the perp.* RP, *till at last it vanishes in* P. *Hence water looks deepest when looked at perpendicularly; but it appears not then to be so deep as it is, by a fourth part.*

For when the angle of incidence ARP is 48 : 40, the angle of refraction AFP becomes 90. And at C, the apparent place of R will be at F, so that FP : RP : : 3 : 4, or PF = $\frac{3}{4}$ PR.

PROP. X.

If AV *be any refracting spherical surface,* C *the* 58.
center, R *the radiating point,* F *the focus after refrac-* 59.
tion; then RA × *fine of incidence* : CR × *fine of re-* 60.
fraction : : AF : CF. 61.

Let RA be the incident ray, AG the refracted one. Draw FH parallel to CA, cutting RA in H. Then < RHF = RAC = angle of incidence, and AFH = FAC = angle of refraction. Put *m*, *n*, for the sines of incidence and refraction. Then in the triangle AFH,

S.RHF or AHF (*m*) : S.AFH (*n*) : : AF : AH.

And

by similar triangles, AR : CR : : AH : CF.
and ex equò, *m* × AR : *n* × CR : : AF : CF.

Cor. 1. *On the contrary, if the rays go the contrary way in the line* GA *or* FA, *they will be refracted to* R; *and* R *and* F *will be conjugate foci.*

Cor.

Fig. Cor. 2. *If rays diverging from* R, *converge to* F; *then changing the mediums, rays converging to* R *will diverge from* F. *Or if rays diverging from* R, *diverge from* F, *then changing the mediums, rays converging to* R, *will converge to* F, *after refraction. Which saves the labour of drawing more figures.*

PROP. XI.

58. *If* AV *a be a very small part of a refracting spherical surface,* C *the center,* R *the radiating point or*
59. *object,* F *the focus after refraction;*
60.
61. *Then the distance of the object and vertex* RV × *sine of incidence :*
Distance of the object and center RC × *sine of refraction* : :
Distance of the vertex and focus VF :
Distance of the center and focus CF, *nearly.*

Let RA be the incident ray, AG or AF the refracted ray; then since A is very near the vertex V, RA = RV, and AF = VF nearly. And (Prop. X.) putting m, n for the sines of incidence and refraction, $m \times AR : n \times CR :: AF : CF$; that is, $m \times RV : n \times CR :: VF : CF$.

Cor. 1. *If* m, n, *be the sines of incidence and refraction, then* $m \times VR \overset{\circ}{+} n \times CR : m \times VR :: CV : VF$.

This follows from the Prop. by compounding or dividing.

Cor. 2. *If the rays be turned back again in the line* GA, *they will be refracted to the focus* R; *which supplies the place of more figures.*

Cor. 3. *If* R *and* F *lye on the same side of the refracting surface; rays diverging from* R *will diverge from* F; *if they lie on different sides, they converge to* F.

PROP.

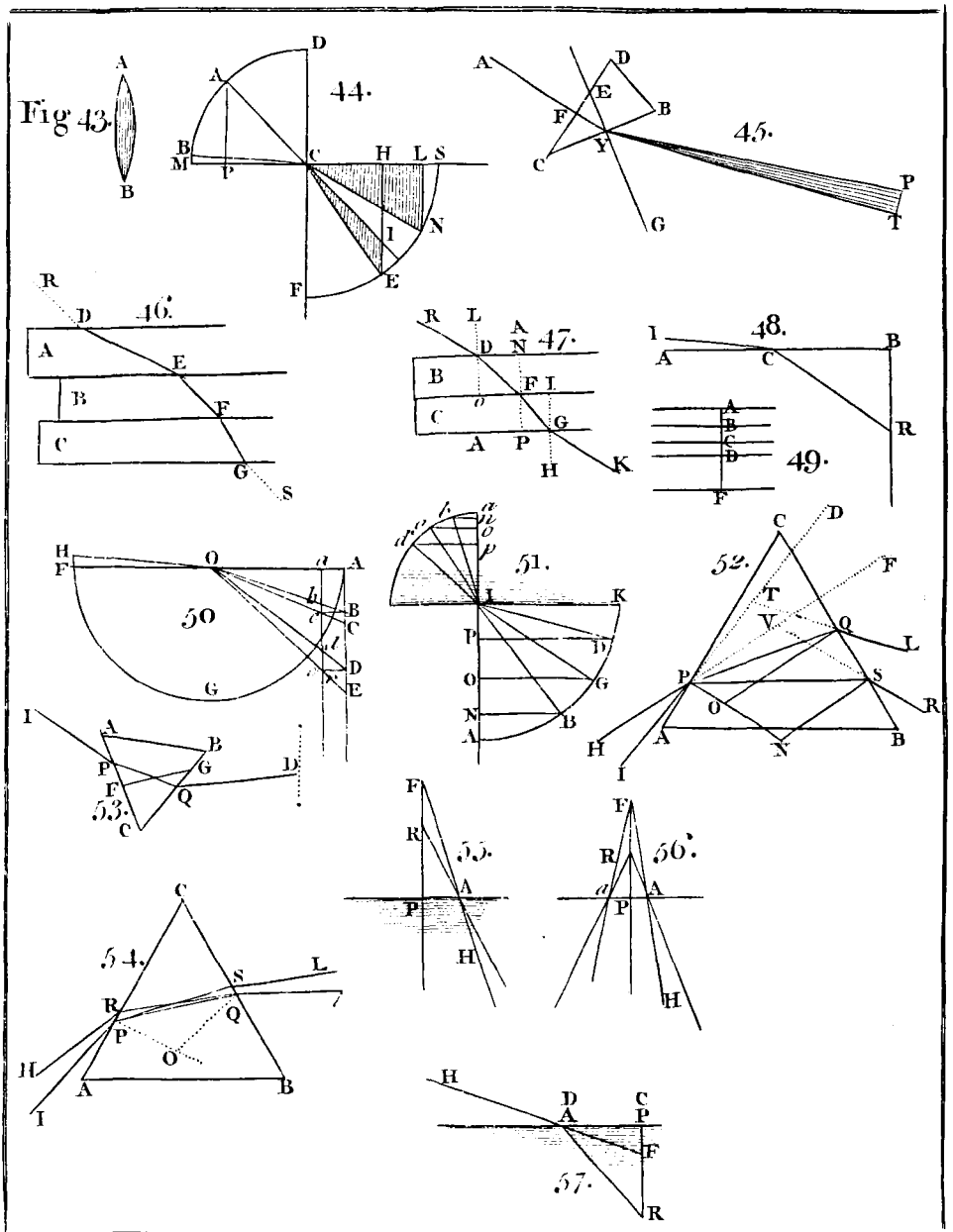
Fig 43.
44.
45.
46.
47.
48.
49.
50
51.
52.
53.
54.
55.
56.
57.

Fig.

PROP. XII.

If parallel rays RA, RV *fall upon any refracting spherical surface* AV, *whose center is* C; F *will be the focus of the refracted rays, so that, the sine of incidence : sine of refraction* : : AF : CF. 62. 63.

Draw the radius CA, then RAC or ACF is the angle of incidence (or its supplement), and FAC the angle of refraction. Let *m*, *n*, be the sines of incidence and refraction. Then in the triangle ACF, S.ACF (*m*) : S.CAF (*n*) : : AF : CF.

Cor. 1. *If the rays be turned back in the line* GA, *and refracted at* A, *they will emerge parallel.*

Cor. 2. *If* AV *be any refracting curve,* AC *perp. to the curve in* A; *and* CF *parallel to* RA; *and if* RA *be the incident ray,* AF *the refracted ray; then* AF : FC : S.*incidence* : S.*refraction.*

PROP. XIII.

If parallel rays RA, RV, *fall on a very small part of a refracting spherical surface* A*a*, *whose center is* C; *and if* F *be the focus, then sine of incidence : sine of refraction* : : VF : CF, *nearly.* 62. 63.

For as AV is a very small arch, AF = VF nearly, therefore (Prop. XII), S.incidence : S.refraction : : AF (VF) : CF.

Cor. 1. *If m, n, be the sines of incidence and refraction; then* $m - n : m$: : *radius* CV : VF *the principal focal distance from the vertex.*

For $m : n$: VF (VC + CF) : CF; and by division, $m - n : m$: : VC : VF.

Cor.

Fig. Cor. 2. *The focus of parallel rays refracted by a*
62. *convex spherical surface of glass is distant from the*
63. *vertex near three times the radius.*

For m is to n, nearly as 3 to 2, and $m - n$ to m as 1 to 3.

Cor. 3. *As* $m - n$ *the difference of the sines : to* n *the lesser : : as* CV *the radius : to* VF — VC, *or* CF *the distance of the focus from the center.*

PROP. XIV.

64. *If* AV *be a small portion of a refracting spherical*
65. *surface,* C *the center,* t, T *the principal foci, or the foci of parallel rays coming out of one medium into the other. And if* R *be the radiating point,* F *the focus; then it will be,* Rt : RV : : RC : RF; *or the contrary, changing the focus for the radiating point.*

Let m, n be the sines of incidence and refraction, d = RV, and r = radius CV. Then (Cor. 1. Prop. XIII.) $m - n : m :: r : \frac{rm}{m-n}$ = VT. And on the contrary $n - m : n :: r : \frac{rn}{n-m}$ = Vt, or rather Vt = $\frac{rn}{m-n}$, and VT — VC or CT = $\frac{rm}{m-n} - r = \frac{rn}{m-n}$, therefore V$t$ = CT, and VT = tC.

But (Prop. XI. Cor. 1.) $md - n \times \overline{d + r} : md :: r$: VF (in fig. 64.), or $md - nd - nr : mr :: d$: VF; and dividing by $m - n$, $d - \frac{nr}{m-n} : \frac{mr}{m-n} :: d$: VF; that is, RV — Vt or Rt : VT or tC : : RV : VF. And compounding, Rt : Rt + tC (RC) : : RV : RV + VF (RF). And (in fig. 65.) it

it is $md - nd + rn : md :: r : VF$. Whence $RV + Vt : VT$ or $Ct :: RV : VF$, &c. Fig. 64. 65.

Cor. 1. $Rt : tC$ *or* $VT :: RV : VF$.
From the demonstration.

Cor. 2. $Rt : tC :: CT : TF$.
For (Cor. 1.) $Rt : tC :: RV : VF :: RV - Rt$ (tV or CT) : $VF - tC$ or $VF - VT$ (TF).

Cor. 3. $Rt : tV :: VT : TF$.
For (Cor. 1.) $Rt : TV :: RV : VF :: RV - Rt$ (tV) : $VF - VT$ (TF).

Cor. 4. *If* T, *t be the principal foci, of rays passing out of one medium into the other; then* $CT = Vt$.
From the demonstration.

PROP. XV.

If AV *be a small portion of a refracting spherical surface;* C *the center,* R *the radiating point or the focus of the incident rays,* F *the focus of the refracted rays. And if* $m =$ S.*incidence,* $n =$ S.*refraction,* $RV = d$, $CV = r$, $VF = f$; *then* $f = \frac{mdr}{m - n \times d - nr}$; *where if the rays converge, or* AV *be concave; d or r will be negative.* 66.

For since the arch AV is very small, $RA = RV = d$, $AF = VF = f$. Draw FH parallel to CA, cutting RA in H. Then by similar triangles $RC\ (d + r) : CF\ (f - r) :: RA$ or $RV\ (d) : AH = \frac{df - dr}{d + r}$. Then in the triangle AFH, S.AHF or CAH (m) : S.AFH or CAF $(n) ::$ AF or VF (f) : AH $\left(\frac{df - dr}{d + r}\right)$. Whence $nf = \frac{df - dr}{d + r} m$,

and

Fig. 66. and $ndf + nrf = dmf - dmr$, or $mdf - ndf - nrf = mdr$, therefore $f = \frac{mdr}{md - nd - nr}$.

Cor. 1. $f = \frac{mdr}{\overline{m - n} . d - nr} = \frac{mdr}{md - n \times \overline{d + r}}$.

Cor. 2. *If rays fall on a concave refractor*, $f = \frac{-mdr}{\overline{m - n} . d + nr}$.

Cor. 3. *If the rays converge to* R, $f = \frac{mdr}{\overline{m - n} . d + nr}$.

For $f = \frac{-mdr}{\overline{m - n} \times -d - nr}$.

Cor. 4. *If it be a plain surface*, $f = \frac{-md}{n}$.

For it is $f = \frac{mdr}{-nr} = -\frac{md}{n}$, r being infinite.

Cor. 5. *If the rays be parallel*, $f = \frac{m}{m - n} r$.

For then d is infinite, and $f = \frac{mdr}{\overline{m - n} . d}$.

SCHOLIUM.

From this general solution it follows, that when f the focal distance comes out affirmative, it must be taken directly forward from V, but when it is negative, it must be taken backward towards R.

In the same manner that f is found from having d, and r, given; either d or r may be found from having the rest given. For example, let r be sought. Multiply the equation, $f = \frac{mdr}{md - nd - nr}$, by

by the denominator $md - nd - nr$, and we shall have $mdf - ndf - nrf = mdr$; and transposing, Fig. 66.
$mdr + nfr = mdf - ndf$, whence $r = \frac{mdf - ndf}{md + nf}$.
And this shews that when m is greater than n, r comes out affirmative, and that the refractor is convex towards the object. But when n is greater than m, r will be negative, and therefore 'tis concave to the object.

Again, let d be sought, having f, r, given. From the former equation, $mdf - ndf - nrf = mdr$; by transposing, $mdf - ndf - mdr = nrf$, and $d = \frac{nrf}{mf - nf - mr}$. And from hence it appears, that if mf be greater than $nf + mr$, then d is affirmative; that is, R is on the convex side of the refractor. But when $nf + mr$ is greater than mf, then d comes out negative, and R is on the concave side of the refractor. And if mf be $= nf + mr$, then d will be infinite, and F is the focus of parallel rays. 67.

It may be further observed, that in all cases where the rays converge to F, if a circle BD be described with any radius from the center F, to cut the refracted rays AF; these rays, passing thro' the meniscus AVDB, will go to the same focus F. For these rays, passing perpendicularly thro' the refracting surface BD, go right forward. And for the same reason, rays diverging from F, will go to R as before.

PROP. XVI.

If parallel rays RA, *tV fall upon a small portion of a sphere, and be refracted by the first surface to* T; *they will be refracted by the second surface to* F, *the middle of* DT. 68.

Let the rays RA, FG meet in H; then since the cord AG cuts the curve at A, G in equal angles,

Fig. 68. gles, the refractions will be equal at A and G; whence the triangle AHG is equiangular, and equilateral. But FT being parallel to AH, the triangle GFT is similar to AHG; whence GF = FT. But GF being = DF very near, therefore DF = FT.

Cor. *If parallel rays fall upon any part of a sphere; and* T *be the focus after the first refraction;* F *will be the focus after the second, so that* GF = FT.

PROP. XVII.

69. 70. *In any lens* BH, *if two radii* CA, *ca, be drawn parallel to one another, from the centers* C, *c, of the two surfaces; and* A*a be drawn cutting the axis in* D. *Then every ray that passes thro'* D, *shall have its incident and emergent rays parallel.*

For by reason of the parallels CA, *ca*, the triangles CAD, *cad*, are similar; therefore CD is to *c*D, as CA to *ca*, that is in a given ratio; and therefore the point D is invariable. And further the angles at A and *a* being equal, the line A*a* cuts the two surfaces in the same angle, and therefore if the ray A*a* be supposed to go both ways, the refractions will be equal and contrary; that is, they make equal angles with A*a*, and lie contrary ways, and therefore are parallel.

Cor. 1. *Hence in double convex and double concave lenses, the point* D *lies within the lens; in a plano convex or plano concave, it is at the convex or concave surface; but in a meniscus, it lies out of the lens, nearer to the greatest curvity. And in a sphere, it is at the center.*

Cor. 2. *The course of a ray, passing thro'* D, *very near the axis, may be taken for a strait line, without sensible error.*

Cor.

Cor. 3. *The point* D *is so placed, that* CG : *c*F : : DG : DF. Fig. 69.

For CA or CG : *ca* or *c*F : : CD : *c*D : : CG — CD (DG) : CF — CD : (DF). 70.

Cor. 4. *As the sum of the radii (or the difference in a meniscus) : to the lesser radius : : so the thickness of the lens : to the distance of* D *from the vertex of greater curvature.*

For since CG : *c*F : : DG : DF, by composition (or division) CG ± *c*F : *c*F : : DG ± DF (FG) : DF.

Cor. 5. *If* A*a be any ray passing thro'* D; *then the tangents to the lens at* A *and a, will be parallel.*

For the angles CA*a* and *ca*A being equal, their complements DAG and D*a*F are equal; and therefore the tangent at A is parallel to the tangent at *a*. And hence

Cor. 6. *For every point* A *of the lens, there is some ray or other* A*a, whose incident and refracted rays will be parallel; and that is the ray passing thro'* D.

For the tangents at A and *a* being parallel, it is the same thing as if the ray was transmitted thro' a medium contained between two parallel surfaces, in which case (by Cor. 2. Prop. III.) the incident and emergent rays will be parallel.

SCHOLIUM.

The point D is by optic writers called the *Center* of the lens.

PROP. XVIII. *Prob.*

Having the lens a*V, and the radiant point* R *given; to find the focus* F, *after the refraction of both the surfaces.* 71. 72.

Let *m*, *n*, be the sines of incidence and refraction, and make *m* × R*v* — *n* × R*c* : *m* × R*v* : :

Fig. the radius $vc : vf$, and f is the focus after the first
71. refraction at av. Again $vf - vV = Vf$; then
72. make as $m \times Cf - n \times Vf : n \times Vf :: \text{radius } CV : VF$, and F is the focus after the second refraction at AV. And thus you may proceed to find the focus after refraction by a third, or fourth surface, &c.

For since $m \times Rv - n \times Rc : m \times Rv :: vc : vf$, by division, $m \times Rv : n \times Rc :: vf : vf - vc$ or cf. And therefore (by Prop. XI.) f is the focus of the rays refracted at av. Also since $m \times Cf - n \times Vf : n \times Vf :: CV : VF$; therefore, $n \times Vf : m \times Cf :: VF : CV + VF$ or CF. And $Vf : Cf :: \frac{VF}{n} : \frac{CF}{m} :: m \times VF : n \times CF$. And therefore (Cor. 2. Prop. XI.) rays converging to f and refracted by AV, will converge to the focus F. This method of demonstration is general, and is applicable to any case.

Cor. *If the incident rays are parallel; make as* $m - n : m :: vc : vf$, *and* f *is the focus after refraction at the first surface. And find* F *as before, for the focus after the second refraction.*

For in this case Rv and Rc are equal.

PROP.

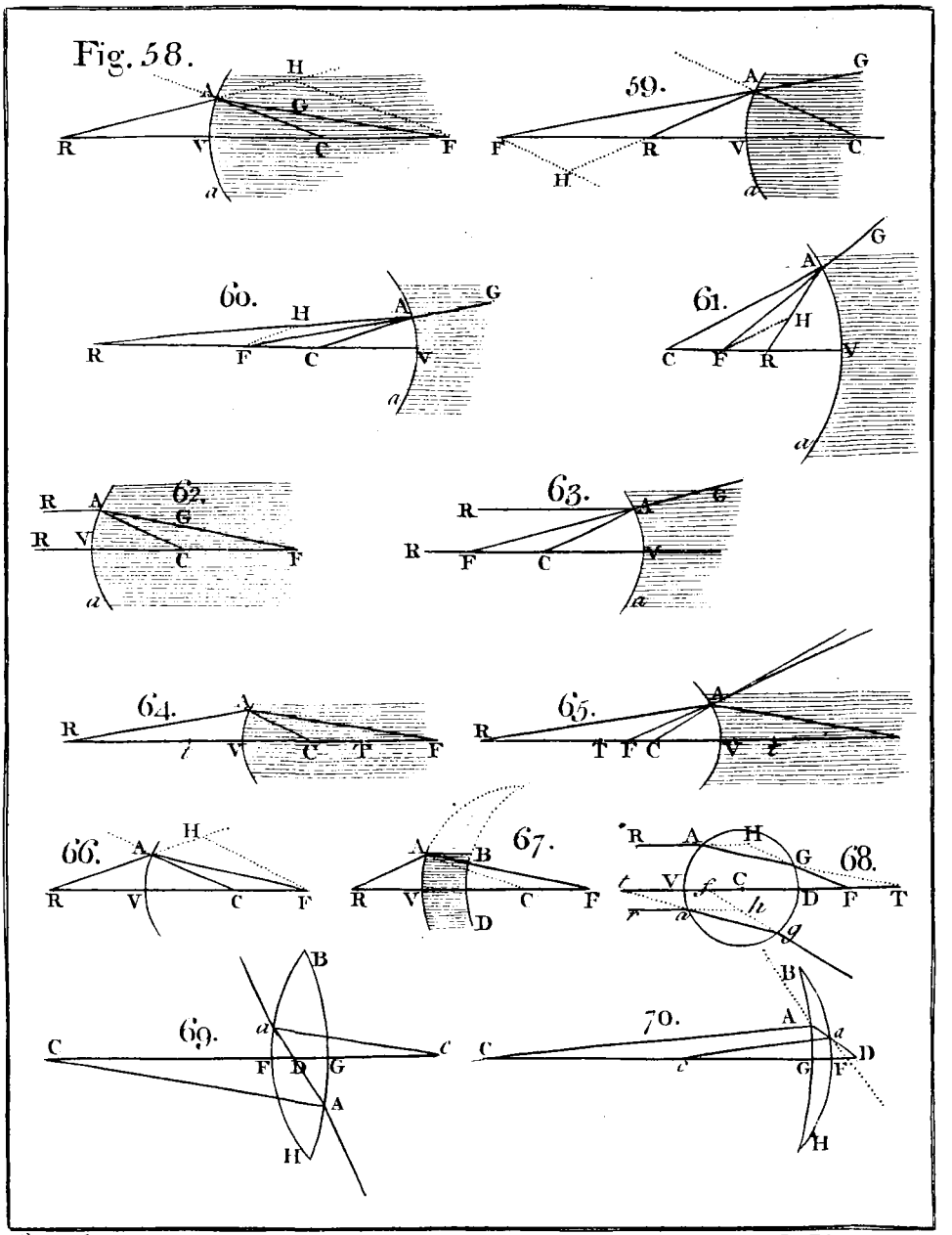
Fig. 58.
59.
60.
61.
62.
63.
64.
65.
66.
67.
68.
69.
70.

Fig.

PROP. XIX.

Let parallel rays Sa, Rv, *be refracted by the lens* Av; *suppose the sines of incidence and refraction as* m *to* n; *and put the radius of the segment towards the object* $cv = r$, *the radius of the segment from the object* CV = R, *the thickness of the lines* vV $= t$, *the principal focal distance* VF $= f$. *And* $p = \frac{n}{m-n}$, $q = \frac{m}{m-n}$; *therefore* $mp = nq$. *Then* 71. 72.

$$f = \frac{Rn \times \overline{qr - t}}{m \times \overline{R + r - t} \times \overline{m - n}};$$ *wherein if* av, *or* AV *be convex the contrary way, then* r *or* R *is negative.*

For (Prop. XVIII. Cor.) $\overline{m - n} : m :: vc\ (r) : vf = \frac{mr}{m-n} = qr$; and V$f = qr - t$. Again $m \times$ C$f - n \times$ V$f : n \times$ Vf : : CV : VF; that is, $m \times \overline{R + qr - t} - n \times \overline{qr - t} : n \times \overline{qr - t} :: R : f$

$$= \frac{Rn \times \overline{qr - t}}{mR + mqr - mt - nqr + nt} =$$

$$\frac{Rn \times \overline{qr - t}}{mR + \overline{m - n} \,.\, qr - \overline{m - n} \,.\, t} =$$

$$\frac{Rn \times \overline{qr - t}}{mR + mr - t \times \overline{m - n}} = \frac{qr - t}{q \times \overline{r + R} - t}\, pR.$$

And a like calculation may be made for the concave, fig. 72.

Cor. 1. *If* $t = 0$, *or inconsiderable, then* $f = \frac{pRr}{R + r}$, *and is the same on either side of the lens.*

For then $f = \frac{nqRr}{m \times \overline{R + r}} = \frac{mpRr}{m \times \overline{R + r}} = \frac{pRr}{R + r}$.

Fig. 71. 72. Cor. 2. *If* $t = 0$, *and av be a plane surface, then* $f = \frac{n}{m-n}$ R.

For then r = infinity, and $f = \frac{pRr}{r} = pR = \frac{n}{m-n}$ R. And

Cor. 3. *If* $t = 0$, *and* AV *a plane surface,* $f = \frac{n}{m-n} r$.

Cor. 4. *If* $t = 0$, *and* R $= r$, *then* $f = \frac{n}{m-n} \times \frac{1}{2} r$.

Cor. 5. *The principal focal distance made by one refraction, is* $\frac{mr}{m-n}$.

For by the demonstration $vf = \frac{mr}{m-n}$.

Cor. 6. *If a luminous body be placed in the principal focus of a lens, it will cast a light to a great distance.*

For the rays emerging nearly parallel, will not unite till at a great distance.

SCHOLIUM.

In glass, $m = 3$, and $n = 2$ nearly; whence $p = 2$, and $q = 3$. Therefore from this Prop and its corollaries, may be deduced the following rules peculiar to glass lenses.

1. In a double convex glass of equal radii, the principal focus is distant, the radius of the sphere; or the focal distance is equal to the radius

2. In a sphere, the principal focus is distant half the radius; of an hemisphere $\frac{4}{3}$ the radius, when the

the convex ſide is expoſed to the rays; and twice the radius, when the plane ſide is expoſed. Fig. 71.

3. In a plano convex, the diſtance of the principal focus is equal to the diameter, when the plane ſide is expoſed to the rays; but to the diameter — $\frac{2}{3}$ the thickneſs, when the convex ſide is expoſed. 72.

4. In a double convex glaſs of different ſpheres, the diſtance of the principal focus is $\frac{2Rr}{R+r}$.

5. In double concaves of equal radii, the principal focus is diſtant the radius of the ſphere, and is virtual.

6. In a plano concave, the principal focus is diſtant twice the radius, and is virtual.

8. In a double concave glaſs of different ſpheres, the diſtance of the principal focus is $-\frac{2Rr}{R+r}$, and is virtual.

9. In a meniſcus, the diſtance of the principal focus is $\frac{2Rr}{r-R}$, the concave ſide being expoſed to the rays.

Fig.

PROP. XX.

71. *If rays issuing from the radiant point* R, *be refrac-*
72. *ted by the lens* Av; *let* m, n = *sines of incidence and refraction,*

d = Rv, *the distance of the radiant point.*
r = cv, *the radius of the nearer surface.*
R = CV *the radius of the further surface.*
t = Vv *the thickness of the lens.*
f = VF *the focal distance.*

$p = \frac{n}{m-n}$, $q = \frac{m}{m-n}$, $pm = qn$; *then*

$$f = \frac{mpdr\mathrm{R} - nd\mathrm{R}t + npr\mathrm{R}t}{md \times \overline{r + \mathrm{R}} - mpr\mathrm{R} - dt \times \overline{m - n} + nrt}$$

wherein, if the rays converge, or if av, AV, *be concave the contrary way, then* d, r, *or* R *is negative.*

Or at short, $f = \frac{\mathrm{D} - t}{\mathrm{D} - t + q\mathrm{R}}\, p\mathrm{R}$, *where* $\mathrm{D} = \frac{qdr}{d - pr}$.

For (by Prop. XVIII.) $m \times \mathrm{R}v - n \times \mathrm{R}c : m \times \mathrm{R}v :: vc : vf$; that is, $md - n \times \overline{d + r} : md :: r : vf = \frac{mdr}{md - nd - nr} = \mathrm{D}$ suppose, and $\mathrm{D} - t = \mathrm{V}f$. Again $m \times \overline{\mathrm{R} + \mathrm{D} - t} - n \times \overline{\mathrm{D} - t} : n \times \overline{\mathrm{D} - t} :: \mathrm{R} : f$, or $m\mathrm{R} + \overline{m - n} \times \mathrm{D} - \overline{m - n} \,.\, t : n\mathrm{D} - nt :: \mathrm{R} : f$, therefore $f = \frac{n\mathrm{DR} - n\mathrm{R}t}{m\mathrm{R} + \overline{m - n} \,.\, \mathrm{D} - \overline{m - n} \,.\, t}$.

But $\mathrm{D} = \frac{mdr}{md - nd - nr} = \frac{\frac{m}{m-n}dr}{d - \frac{n}{m-n}r} = \frac{qdr}{d - pr}$;

therefore $f =$ $\frac{nodr\mathrm{R}}{d - pr}$

Fig. 71. 72.

$$\frac{\frac{nqdR}{d-pr} - nRt}{mR + \overline{m-n} \times \frac{qdr}{d-pr} - \overline{m-n} \times t} =$$

$$\frac{nqdrR - ndRt + nprRt}{mdR - mprR + \overline{m-n} \,.\, qdr - \overline{m-n} \times dt - prt}$$

$$= \frac{mpdrR - ndRt + nprRt}{mdR - mprR + m \times dr - \overline{m-n} \times dt + \overline{m-n} \times prt}$$

$$= \frac{mpdrR - ndRt + nprRt}{md \times \overline{r+R} - mprR - dt \times \overline{m-n} + nrt};$$

because $\overline{m-n} \,.\, q = m$, and $\overline{m-n} \,.\, p = n$. Or at short $f = \frac{D-t}{D-t+qR}\, pR$, where $D = \frac{qdr}{d-pr}$. And a like computation may be made for the concave, fig. 72.

Cor. 1. *If t be nothing or inconsiderable, then* $f = \frac{pdrR}{d \times \overline{r+R} - prR}$, *and is the same on both sides the lens, whilst the distance d continues the same.*

Cor. 2. *If the lens be of glass; then* $f = \frac{6drR - 2dRt + 4rRt}{3d \times \overline{r+R} - 6rR - dt + 2rt}$; *or when* $t = 0$, $f = \frac{2drR}{d \times \overline{r+R} - 2rR}$.

Cor. 3. *In a plano convex, if* $t = 0$, *and* AV *a plane surface; then* $f = \frac{ndr}{\overline{m-n} \,.\, d - nr}$.

For r vanishing, $f = \frac{pdrR}{dR - prR} = \frac{dr}{\frac{d}{p} - r} = \frac{ndr}{\frac{nd}{p} - nr} = \frac{ndr}{\overline{m-n} \,.\, d - nr}$.

Fig. 71. 72. Cor. 4. *If* $t = 0$, *and the lens has equal convexities; then* $f = \frac{ndr}{\overline{m - n} \times 2d - nr}$. *And in glass,* $f = \frac{dr}{d - r}$.

Cor. 5. *When* $t = 0$, *in a double concave,* $f = \frac{pdrR}{-d \times \overline{r + R} - prR}$. *And when the radii are equal,* $f = -\frac{dr}{d + r}$, *for glass.*

Cor. 6. *In a plano concave, exposed with the concave side to the rays,* $f = \frac{-pdR}{d + pR}$.

Cor. 7. *In a meniscus, the convex side turned to the rays,* $f = \frac{-pdrR}{d \times \overline{r - R} + prR}$.

Cor. 8. *The focal distance made by a single refraction is* $\frac{mdr}{\overline{m - n} \,.\, d - nr}$.

From the demonstration.

Cor. 9. *If the radiant point and the focus be equidistant from a lens; they will each of them be distant twice the principal focal distance.*

For put $d = f = \frac{pdrR}{d \times \overline{r + R} - prR}$, then $d \times \overline{r + R} - prR = prR$, or $d \times \overline{r + R} = 2prR$, whence $d = \frac{2pRr}{r + R}$ = twice the principal focal distance, by Cor. 1. Prop. XIX.

Cor. 10. *If the radiant point be nearer the lens, than the principal focus; the rays after refraction will*

will diverge; if it is in the principal focus, they will emerge parallel; and if it is further off, they will converge. Fig. 71. 72.

SCHOLIUM.

Hence if all the quantities m, n, d, r, R, f, except one be given, that one may be found, by the reduction of the equation in Cor. 1.

PROP. XXI.

If P, p, *be the principal foci of a sphere or lens* Av; R *the radiant point*; F *the focus by refraction*; D *the center of the sphere or lens*; *then* RP, RD, RF, *are continual proportionals, where* P *and* F *must lie the same way from* R. 73. 74.

Let the focal distance DP or Dp = F, the rest as in the last Prop. Then (Cor. 1. Prop. XIX.) Vp or DP $= \frac{pr\mathrm{R}}{r + \mathrm{R}} = \mathrm{F}$, and $pr\mathrm{R} = \mathrm{F} \times \overline{r + \mathrm{R}}$: And (Cor. 1. Prop. XX.) VF or DF $=$

$$\frac{dpr\mathrm{R}}{d \times \overline{r + \mathrm{R}} - pr\mathrm{R}} = \frac{d\mathrm{F} \times \overline{r + \mathrm{R}}}{d \times \overline{r + \mathrm{R}} - \mathrm{F} \times \overline{r + \mathrm{R}}}$$

$= \frac{d\mathrm{F}}{d - \mathrm{F}} = \frac{\mathrm{RD} \times \mathrm{DP}}{\mathrm{RP}}$, and RP $\times$ DF $=$ RD $\times$ DP, whence RP : RD : : DP : DF; and compounding, RP : RD : : RP + DP (RD) : RD + DF (RF). And a like computation may be made for the concave, fig. 74.

Cor. 1. RP : RD : : DP : DF; *or* DF $= \frac{\mathrm{RD} \times \mathrm{DP}}{\mathrm{RD} - \mathrm{DP}}$.

From the demonstration.

Cor. 2. RP : PD : : DP : pF; *or* RP $\times$ pF $=$ PD^2.

For

Fig. 73. 74. For (Cor. 1.) RP : RD : : DP : DF; and by division RP : RD — RP (PD) : : PD : DF — DP (*p*F).

Cor. 3. *p*F *is always reciprocally as* RP; *and they lie contrary ways from p and* P.

Cor. 4. R *and* F *are conjugate foci to one another; and when they are on the same side of the lens, the incident and refracted rays diverge both from* R *and* F, *or else both converge to* R *and* F. *And the contrary when on different sides.*

PROP. XXII.

73. 74. *If* Av *be a lens or sphere,* F *the focus of the refracted rays which flow from the radiant point* R, *p the principal focus. Then* RF : RD : : DF : D*p*, *the principal focal distance.*

For (Prop. XXI.) RF : RD : : RD : RP, and by division, RF : RF — RD (DF) : : RD : RD — RP (PD or *p*D).

Cor. 1. *In a convex, the principal focal distance* $Dp = \frac{RD \times DF}{RD + DF}$.

Cor. 2. RF : DF : : DF : *p*F, *or* $pF = \frac{DF^2}{RF} = \frac{DF}{RF} \times DF$.

For since RF : RD : : DF : D*p*, by division RF : RF — RD (DF) : : DF : DF — D*p* (*p*F.)

Cor. 3. *Hence, the focus* F *may be found geometrically thus. Let* P *be the principal focus; with the center* D *and radius* DP, *describe the arch* PG, *cutting*

ting any incident ray RA, *in* G. *Join* DG, *and draw* AF *parallel to it, cutting the axis* RD *in* F, *then* F *is the focus.* Fig. 73. 74.

For RF : RD : : DF : DP ; that is, RF : RA : : DF : AG, therefore the triangles RGD, RAF are similar, and AF parallel to GD. And all rays proceeding from G (or *g*) will emerge parallel to GD.

SCHOLIUM.

In the first Corol. we have a good practical rule for finding the principal focus of a lens, having first found any other focus by trial. And in Cor. 2. we have another rule tending to the same purpose, which finds the excess of any other focal distance found by trial, above the principal focal distance. Both these are very easy in practice.

PROP. XXIII.

The distance of the radiating point and its focus, made by a convex lens, that is, RF *is the least possible, when they are equidistant from the lens.* 73.

For (by Cor. 2. Prop. XXI). RP : PD : : PD : *p*F. Now if RP = *p*F, then the sum of the extremes RP, *p*F is equal to the sum of the means 2PD, which is constant. But in any other case (Propor. Prop IX.) the sum of the extremes RP, *p*F is greater than the sum of the means, that is, greater than the sum of the extremes when they are equal. And therefore RP + *pf* is the least when RP = *p*F, and adding P*p*, the whole distance RF is the least when RP = *p*F, and consequently when RD = DF.

Cor. *The radiating point and its focus is at the least distance, from each other, when each of them is distant from the lens, twice the principal focal distance.*

For

Fig. 73. For then RD = RP + PD = 2PD, and DF = $Dp + pF = 2Dp = 2DP$.

PROP. XXIV.

75. *An oblique pencil of rays* SAGC, *has its focus* G *a little nearer the lens, than a direct pencil* RAFC.

For if DS = DR, then the angle CSA will be ſomething leſs than the angle CRA; and upon that account the rays SA, SC, will be ſooner brought to interſect at G, than the rays RA, RC, do at F. But further, the rays RA, RC, falling very nearly perpendicular to the ſides of the lens AC, HN, are leſs bent, than the rays SA, SC, which fall obliquely on both ſides the lens. For the more oblique they are, the more they are bent, and turned out of their direct way. And conſequently the oblique rays SA, SC will ſooner interſect in G, than thoſe at F. But ſince the angle RDS is generally very ſmall, the difference between DF and DG will likewiſe be very ſmall.

Cor. 1. *The focus of an oblique pencil, by a ſingle refraction is nearly at the ſame diſtance as of a direct pencil.*

For in both caſes the extreme rays will interſect the ray which paſſes thro' the center of the ſurface AC, at the ſame diſtance.

Cor. 2. *This Prop. holds good in a concave lens, and alſo in a meniſcus, as well as in a convex one.*

For in all caſes the more oblique the rays are the more they are bent, and the ſooner they will interſect a direct ray paſſing thro' D the center of the lens, by Cor. 2. Prop. XVII. But I endeavour to avoid drawing a multiplicity of figures.

PROP.

Fig.

PROP. XXV. 75.

A convex lens collects the rays nearer together, and a concave one disperses them.

For rays that are refracted at a convex lens, are bent at the points of refraction so, that they incline more towards one another than before: but in concaves the rays after refraction, being bent the contrary way, are made to separate more from one another. And this will be so whether there be one refracting surface, or two such; or if there be more. For every succeeding refraction, adds to the effect, by making the rays either converge or diverge so much the faster.

Cor. 1. *Converging rays are made more converging by a convex lens; and diverging rays are made more diverging by a concave.*

Cor. 2. *A meniscus has the properties of a convex glass, when the inner radius is the greater. And of a concave, when the inner radius is the lesser. Except when the two surfaces are concentric; and then it belongs to neither; for the rays will emerge parallel.*

Cor. 3. *A lens or spectacle glass proper for an old person, must be such as to make the image of an object appear at that point where he can see that object distinctly with his naked eye; and the same is true of a concave, in respect of a short-sighted person.*

SCHOLIUM.

From what has been before laid down, the properties of all sorts of single lenses may be deduced for practice as follows.

Let R, F, be conjugate foci; P, *p* the principal foci; then, 76.

1. Pa-

Fig. 1. Parallel rays falling on one side of a convex
79. lens A; will be refracted to P or *p* on the other side.

2. Parallel rays falling on one side of a concave lens A; will by refraction, diverge from P or *p* on the same side.

3. In a convex lens A, rays diverging from P or *p*; will emerge parallel on the other side.

4. In a concave lens A, rays converging to P or *p*; will emerge parallel, going out of the lens on the same side.

76. 5. In convex lenses, rays diverging from R beyond P; will converge to F beyond *p*. And the contrary.

77. 6. In convex lenses, rays diverging from R which is nearer than P; will diverge from F, on the same side with R.

78. 7. In convex lenses, rays converging to F, will by refraction converge to R, nearer than P or *f*.

79. 8. In concave lenses, rays converging to R, beyond P; will diverge from F, beyond *p*, and the contrary.

80. 9. In concave lenses, rays converging to F,
81. nearer than *p*; will by refraction converge to R, beyond F.

82. 10. In concave lenses, rays diverging from R, beyond *p*; will after refraction diverge from F nearer than *p*.

83. 11. In concave lenses, rays diverging from R, nearer than *p*, will diverge from F, nearer still than *p*.

Note, I reckon a meniscus, convex or concave, according as the center of its inner surface is further off, or nearer than the center of the outward surface.

And

And in all these cases, the conjugate foci F f, are so situated, that it will always be, Fig. 76. to 83.

RA : PA or pA : : RF : AF : : AF : pF
or RP : AP : : RA : AF : : Ap : pF.
or RP : RA : : RA : RF : : PA : AF.

Any of these rules will serve to find the conjugate focus. All this appears from what has been before demonstrated; particularly from Cor. 4 and 5, Prop. XX, where the rules for diverging rays for convex glasses is $\frac{dr}{d-r}$ = focal distance; and for concaves, $-\frac{dr}{d+r}$ = focal distance. And it is the same thing whether the rays diverge for convexes, or converge for concaves; all the quantities are the same in both, and have the same situation. Therefore if a convex and a concave have the same principal focal distance; and if a ray diverge from any focus in the convex, and another ray converge to the same focus, thro' the concave (put in its place); then will both have the same conjugate foci. And in their motions, they will describe separate parts of the same lines.

The properties of lenses, or refracting surfaces, demonstrated in the foregoing propositions, hold good in regard to the foci, if the mediums be changed; provided you make the rays of light go contrary ways thro' the foci, to what they do in these propositions. That is, if you suppose the rays going out of a dense medium into a rare one, or to be refracted out of a dense medium thro' lenses of air, or some rare medium; you must suppose the rays to converge instead of diverging, and to diverge instead of converging; and then the focus will be found by the foregoing Rules.

PROP.

Fig.

PROP. XXVI. *Prob.*

To find the principal focus of any lens.

1 *Way.*

Hold a convex lens perp. against the rays of the sun, hold a white paper behind it, to receive the refracted light, which will make a round white spot upon the paper. Move the paper back and forward till this spot, which is the sun's image, be the least possible; there fix it. Then the distance of the paper from the lens, is the focal distance required, or the burning point.

2 *Way.*

Cover one side of a convex lens with paper, having several holes made in it with a pin; and placing the glass directly against the sun beams; the light passing thro' the holes will make so many white spots upon a paper held behind it. Move the paper back and forward till all these spots coincide in one; there is the focus. And the distance of the paper from the glass being measured, gives the focal distance.

3 *Way.*

Place a convex lens so, between any object (as a window in the day, or a candle in the night) and a white wall or paper, that the image of the object may be painted distinctly thereon, which may be found by moving the lens back and forward. Then measure the distance of the lens from the object, and also from the image. Multiply them together, and divide their product by their sum, the quotient will give the focal distance, by Cor. 1. Prop. XXII. Or (Cor. 2.) divide the square of the distance of the observed focus, by the distance of

of the object from this focus, gives the excess above the principal focal distance. If the lens be in the midway between the object and image; then half the distance of the lens from either of them, is the focal distance. Fig.

4 *Way.*

Cover one side of a concave lens with paper, having two holes made with a pin, diametrically opposite to one another. The lens being exposed to the sun beams, and a paper held behind it; the light passing thro' the lens will make two white spots upon the paper. Move the paper back and forward, till the distance of the two spots on the paper, be twice the distance of the two holes in the cover; then the distance of the white paper from the lens is the focal distance.

PROP. XXVII. *Prob.*

To find the vertex or center of a lens.

1 *Way.*

Hold the lens at a proper distance from the eye, and observe the two reflected images of a candle, made from the two surfaces. Move the lens till the two images coincide, and that point is the vertex. And if this be in the middle of its surface, the lens is truly centered, otherwise not.

2 *Way.*

Draw two black lines AB, KL, cross one another upon a white wall, or rather on paper. Take the lens CDEF, and holding it directly between your eye and the two lines, and parallel to the wall. Move it to the right and left, and you'll see the part *gh* of the line AB, which appears thro' the glass, to move back and forward. Hold the 84.

Fig. 84. glass at last, so that *gh* may coincide with AB; then does AB pass thro' the vertex or center of the glass. Repeat the same thing with the line KL and the part *no*; moving the glass up and down, till they coincide. Mark the point Z on the glass, where AB, KL intersect, whilst *gh*, *no*, coincide with them, and that intersection Z is the vertex.

Note, it may be as well to fix the glass, and move your eye, till A*gh*B, and K*no*L, be two continued right lines, whose intersection gives the vertex.

PROP. XXVIII.

Wherever the rays, which come from all the points of an object, meet again in so many other points, to which they converge by refraction; there they will make the picture of the object upon any white body on which they fall.

85. Let PR be any object, AB a lens. The rays that diverge from any point Q fall upon the lens, and are refracted to their focus *q*, where they all meet, and make the image of Q upon a paper held there. In like manner the rays which diverge from P, are refracted to their focus *p*, and there give the image of P; and the rays diverging from R, are refracted to *r*, and make the image of R. And thus, from all the intermediate points of the object, the rays proceeding to the lens, are refracted to as many correspondent points in the focus; and will all together make there the image *pqr* of the object PQR, in its proper shape and colours. But then the picture is inverted or turned upside down, and the right side to the left.

Cor. 1. *Rays flowing from all the points of an object, as* PR, *paint the image thereof pr, in the real focus q, and may be seen there upon a white paper; or without the paper it may be seen there hanging in the*

the air, by an eye at O, *placed at a proper distance, as* 6 *or* 8 *inches, &c. behind the focus.* Fig. 85.

Cor. 2. *An object seen by refraction, appears in that place, from whence the rays after their last refraction diverge to the spectator's eye.*

Cor. 3. *Rays flowing from any point of an object, must be so refracted, as all to meet again in some other point, to give the image of that point.*

For if they should fall upon different points, it would breed nothing but confusion, for different points cannot represent that one point from which the rays come. All the rays flowing from the several points, must go to as many correspondent points, to make the compleat image of the body. And this will appear on a paper held there; or if there be no paper, the rays will diverge from that image, as from the body at first; and therefore may be seen by an eye placed behind it, for the same reason that a body is visible by the rays flowing from it at first.

PROP. XXIX.

The image of a right line immersed in water, or any fluid, is concave towards the eye; and is situated in a plane passing thro' the eye.

Let the line AB in the fluid be parallel to the 86.
surface RS, and the eye at E directly over it. Then (by Cor. 6. Prop. IX.) the focus of the point C is at G, so that DG $= \frac{3}{4}$ DC. But (by the same) as the eye moves towards R or S, G will seem to rise; or which is the same thing, as G moves further off to F or H, it will seem to rise up, till it get to the surface RS; therefore RF and SH continually grow less and less. That is, the focus of A and B are nearer the surface, than G or the

Fig. 86. focus of C; and consequently the image FGH is concave towards RS.

If AB is not parallel to the surface, yet as one part is raised as much as the other is depressed, the image will still be concave; and that if the eye be moved out of the perpendicular ED. And a plain that at first passed thro' EFABHG, will also pass thro' EFGH, when the eye is moved laterally.

Cor. 1. *If the eye at* E *was in a dense medium, and the line* AB *in a rare one. The points* A *and* B, *at a distance from* C, *would seem to descend; and the image of* AB *would be convex towards the surface* RS.

For here G would be the object and C the image, and if FGH be reduced to a strait line, ACB will be reduced to a curve convex towards G. Hence therefore

Cor. 2. *A right line seen thro' any medium terminated by parallel planes, will appear a right line.*

For the two refractions correct one another, having contrary effects.

Cor. 3. *A plane surface immerged deep in water, or any fluid, will appear concave to the eye.*

Cor. 4. *The image of a short right line immerged in water, does not sensibly differ from a right line.*

PROP. XXX.

The image of a right line made by refraction thro' a lens, is concave towards the lens.

87. Let AB be a lens, PR a right line directly exposed to the lens. Then (by Prop. XXIV.) if P, Q, R, were equally distant from the lens, *r* and

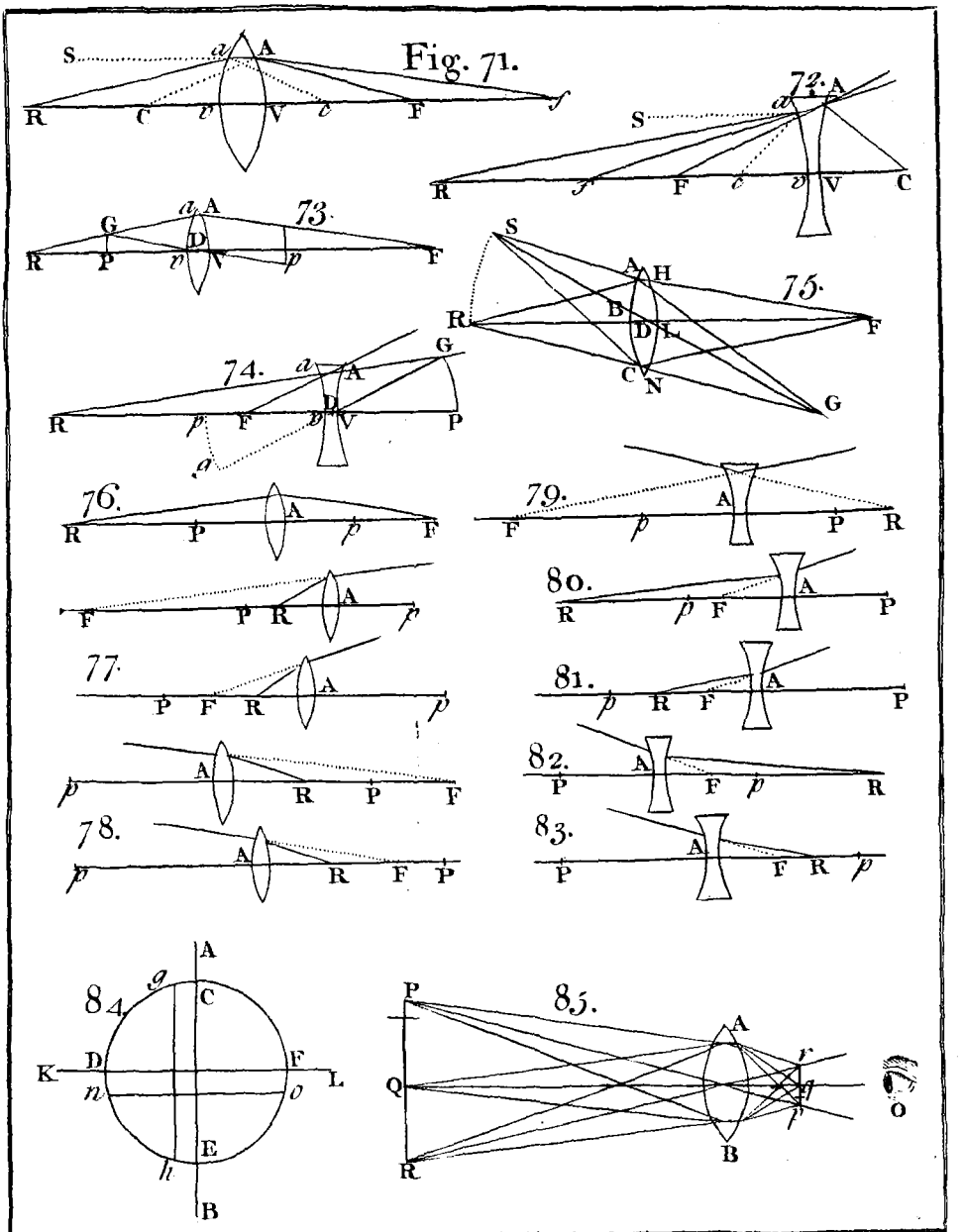
Fig. 71.
72.
73.
74.
75.
76.
77.
78.
79.
80.
81.
82.
83.
84.
85.

and p would be nearer the lens than q, and therefore rqp is a curve line. But PQR being a right line, P and R are further off than Q, and that brings the focus p, and focus r nearer the lens still; and consequently rqp is more curve than before, and is concave towards the lens. And (from Cor. 2. Prop. XXIV.) the same holds good in a concave, and meniscus. Fig. 87.

Cor. 1. *The image of a right line made by one refraction of a spherical surface, is also a little concave towards that surface.*

For supposing rpq made only by the first refraction. Then if P, Q, R be equidistant from the lens; (by Cor. 1. Prop. XXIV.) p, q, r would also be equidistant. But since P and R are something further than Q; r and p will be something nearer than q; or rqp will be a curve line.

Cor. 2. *The image of a short right line, made by refraction thro' a lens, or thro' a single surface, does not sensibly differ from a right line.*

For the deviation of the image of a very long line, from a right line, is but very little curved, and scarce perceptible.

Cor. 3. *The image of a circle refracted thro' a lens, to which it is concentric, will be nearly a circle also concentric to the lens. Or thro' a single surface.*

For being concave to the lens, a small part of it does not sensibly differ from a circle; whether it be thro' a lens or thro' a single surface.

Cor. 4. *The image of a plane figure, made by refraction thro' a lens, is concave towards the lens; tho' in a small figure it does not sensibly differ from a plane. And the same thro' a single surface.*

Fig.

PROP. XXXI.

The object and its image made by a lens, subtend equal angles at the lens.

88. For let D be the center of the lens AB, PQR
89. the object, *pqr* its image. Then (Cor. 2. Prop. XVII.) PD*p* is nearly a straight line, and likewise RD*r* is also a streight line; consequently the angle PDR subtended by the object, is equal to the angle *p*D*r* subtended by the image, the angular point being at the center of the lens D.

Cor. 1. *Hence the object and image are equal, when they meet together.*

64. Cor. 2. *The object and image made by a single refraction, subtend equal angles at the center of the refracting surface.*

For the unrefracted rays flowing from the extremes of the object, pass thro' the center; and the object and image are contained between these.

PROP. XXXII.

88. *The length of an object, is to the length of the*
89. *image, made by a lens; as the distance of the object from the center of the lens, to the distance of the image from it.*

For (Prop. XXXI.) the angles PDR and *p*D*r* being equal, the triangles PDR, *p*D*r* are similar; Q*q* being perp. to both PR and *pr*. Therefore PR : *pr* : : PD : *p*D : : DQ : D*q*.

Cor. 1. *The magnitude of the object (as to its area), is to the magnitude of the image; as the square*

of

of the object's distance, is to the square of the image's distance, from the lens. Fig. 88.

For the areas are as the squares of the diameters. 89.

Cor. 2. *If* T *be the principal focus of the lens; then the diameter of the object, is to the diameter of the image; as* QT : *is to* TD.

For PR : *pr* : : DQ : D*q* : : (Cor. 1. Prop. XXI.) QT : TD.

Cor. 3. *Hence a convex magnifies an object, when it is nearer than twice the principal focal distance: but if further off, it lessens it. That is, in the first case, the image is bigger, and in the second, the object is bigger.*

Cor. 4. *In all cases a concave lens diminishes an object, or the image is less than the object.*

Cor. 5. *The length of the object, and the length of its image made by a single refraction; are as their distances from the center of the refracting surface.*

For (Cor. 2. Prop. XXXI.) they make equal angles at that center.

Cor. 6. *A plain glass, especially if it be thick, magnifies a body.* 93.

For CD, EF being parallel, AC is parallel to EO, and BD to FO. Therefore AB, thro' the glass CF, appears of the magnitude *ab*.

Cor. 7. *If the object be close to the lens it is very little magnified thereby: or if the eye be close to the lens.*

For every part of it appears nearly, in the place it is really in.

Cor. 8. *The apparent magnitude of a body, is as the angle which the image appears under to the eye in any place.*

Fig.

PROP. XXXIII.

88. *If* T *be the principal focus of a lens; then the*
89. *distance of the object* PR *from the lens, is to the distance of the image pr; as* QT *to* TD.

For (Cor. 2. Prop XXXII.) QT : TD : : diameter of the object : diameter of the image : : (Prop. XXXII.) DQ : D*q*.

Cor. *When* QT = TD, *the image is equal to the object.*

PROP. XXXIV.

88. *If the object and its image be both on the same*
89. *side of the lens; the image will be erect; if they be on different sides, the image will be inverted.*

For when the rays keep the same position till they come at the image, then the image will have the same position as the object, and that is when they are both on one side of the glass. But when the rays cross one another, before they come at the focus, or where the image is, and that is when they pass thro' the glass; here the rays from the upper part of the object go to the lower part of the image, and the right to the left, &c. that is, the image will then be inverted. Thus P and *p*, also R and *r*, lie contrary ways by the convex lens; and the same way by the concave one.

90. Cor. 1. *When the object and image are on different sides the lens, as the object approaches the lens the image recedes from it; or if the object recedes, the image approaches it. In general, if the object* Q *from an infinite distance approaches* D, *the image flies from the principal focus t to q; and when* Q *arrives at the principal focus* T, *q is infinitely distant.*

For

For (by Cor. 3. Prop. XXI.) QT and tq are reciprocally proportional. Fig.

Cor. 2. *If the object and image be both on one side of the lens; if the object moves towards the lens; the image also moves towards the lens. And if the object moves from it, the image moves from it.* 91.

For if t is the principal focus, tq is reciprocally as tQ, by Cor. 3. Prop. XXI.

Cor. 3. *In a convex lens, if the object be beyond the principal focus, its image will be on the other side of the glass inverted. But if the object is nearer than the principal focus, the image will be on the same side of the glass, erect.* 90.

For in the motion of Q to T, tq becomes infinite at T, and whilst Q goes from T towards D, q comes up on the same side of the glass with Q, and then the image becomes erect.

Cor. 4. *In a concave lens, the object and image are always on one side of the lens.*

Cor. 5. *The distance of the image may be increased at pleasure, and also its magnitude; by bringing the object nearer the principal focus.*

PROP. XXXV. *Prob.*

Having a lens whose principal focal distance is known; to find the distance of an object, that its diameter may be to the diameter of its image, in the given ratio of a to 1. 71.

This is easily resolved by Cor. 1. Prop. XX. For since $d : f :: a : 1$; therefore $\frac{d}{a} = f = \frac{pdr\mathrm{R}}{d \times \overline{r + \mathrm{R}} - pr\mathrm{R}}$, and $d \times \overline{r + \mathrm{R}} - pr\mathrm{R} = apr\mathrm{R}$;

there-

Fig. 71. therefore $d \times \overline{r + R} = apr R + prR = \overline{a + 1} \times prR$, whence $d = \frac{a + 1}{\overline{r + R}} \times prR$. Let t = principal focal distance; then (Cor. 1. Prop. XIX.) $t = \frac{prR}{r + R}$, and therefore $d = t \times \overline{a + 1}$.

Cor. *In like manner, if all the quantities, f, p, d, r, R, except one, be given; that one may be found by resolving the equation* $f = \frac{pdrR}{d \times \overline{r + R} - prR}$.

PROP. XXXVI.

The image made by a lens, becomes visible, by placing the eye to receive the diverging rays going from the image, and at a proper distance for distinct vision.

To see the image, one must behold it as one would do any other visible object. And consequently in order to see it, the eye must be placed in the diverging rays, so that they may enter the eye, and thereby make the image visible. But it cannot be seen in any other situation, than in the diverging rays; for if these miss the eye there can be no vision. For as all the points of any visible body are radiant points, so all the points of an image are radiant points, each in its proper pencil of rays issuing therefrom. All the difference is, the image can only be seen, when the eye is placed in those pencils; whereas a luminous body, that send rays every way, may be seen in any situation.

Cor. 1. *The image made in the air by the lens, may not only be seen by the eye placed in the diverging rays; but it may be seen upon a paper, placed in the focus of the glass.*

Cor.

Cor. 2. *If* R *be an object*, F *the focus*; *then to an eye at* O, *beyond the glass*; *the object* R *shall appear at* F; *and therefore it is magnified.* Fig. 92.

For an object appears to be situated in the place, from which the rays come last to the eye, which is at F.

Cor. 3. *Concave glasses, make objects appear nearer, smaller and fainter than they are.* 89.

For by the spreading of the rays, by the refraction of a concave, some of them miss the eye; which would fall upon it if the glass was not there.

Cor. 4. *In a convex lens if the eye be placed between the glass and the real image*; *the image will appear erect, but confused, and nearer the eye.* 88.

For the rays do not cross one another before they come to the eye. As if the eye was between D and *q*, there is no crossing but at *q*, and the eye takes them before they come there. It appears nearer the eye, because it is confused; for experience has taught us, that objects very near the eye, always appear confused; and therefore thro' custom we judge these objects always to be near the eye, which appear confused.

Cor. 5. *Likewise if the eye be placed either between* D *and q, or beyond q, and you look with both eyes*; *the object will appear double.*

For in such a position, the axis of the eyes cannot both of them be directed to the same point of the image, to make it appear single.

Cor. 6. *If a convex lens be fixt in the window shut, and the room made dark, the pictures of external objects will be painted upon a paper held in the focus of the glass.*

For by Cor. 2. the images will be found there, and if the objects are very luminous, and the room

Fig. room dark, they will appear bright, and in their proper colours, but inverted.

PROP. XXXVII.

94. *If an object* PR *be placed in the principal focus* Q, *of a lens* AB; *its apparent magnitude at any place whatever as* O, *beyond the lens, will be invariably the same; and equal to the apparent magnitude when seen from* D, *the center of the lens, with the naked eye.*

For (by Cor. 10. Prop. XX.) all the rays of the pencil PAD, will emerge parallel to one another, and to the axis PD; and therefore the angle DOA will be equal to QDP; but (Cor. 8. Prop. XXXII.) DOA is the apparent magnitude of QP, seen by refraction at O, and QDP is the magnitude as seen from D. Therefore $\angle$ QDP = $\angle$ O = $\angle$ L = $\angle$ I, (which measures the apparent magnitude of PQ,) whether the eye be placed at O, L, or I, &c.

Cor. 1. *Hence the apparent magnitude of a body placed in the principal focus will always continue the same, however the eye is moved backward or forward from the lens.*

Cor. 2. *The nearer the eye is to the lens, the more of the object appears; and the further off, the less of it is seen.*

For the eye at O can see no more of the object than P; but at L, some parts above P may be seen by rays coming from thence thro' A to L. But if the eye be removed back from O, the ray AO will then miss the lens, and the point P will not be visible.

Cor. 3. *If the object be nearer than the principal focus, its apparent magnitude grows less in going from the*

the glaſs. If the object be further, the apparent magnitude increaſes, in going from it. Fig.

When the object is nearer than the principal focus, as at R (fig. 92.); then the focus F, and image there, will be on the ſame ſide of the glaſs; therefore the eye at O going further from the glaſs, goes alſo further from the image at F, and upon that account, it will appear leſs and leſs, but by ſlow degrees.

But when the object is beyond the principal focus as at Q (fig. 90), then the focus *q* will be on the contrary ſide of the glaſs; that is, it will be on the ſame ſide with the eye. Then let the eye be placed beyond *q* to view the image there; and as it approaches *q*, the apparent magnitude of the image will grow bigger and bigger (being as the angle it appears under), and at *q*, it becomes infinite, and infinitely confuſed, and begins to be inverted again. Then proceeding ſtill from *q* to D it decreaſes again from infinity to a given magnitude. So that on either ſide of *q*, its apparent magnitude will be as the diſtance from *q*, therefore it increaſes going from D till it be infinite at *q*.

SCHOLIUM.

There are other phœnomena of glaſs lenſes, reſolvable the ſame way, ſuch as the following.

1. If the eye be fixt in the principal focus, the apparent magnitude of an object will be invariably the ſame, wherever the object is placed beyond the glaſs.

2. If the eye is fixed at a leſs diſtance than the principal focus; the apparent magnitude of an object is diminiſhed, as it is further removed from the glaſs, but by ſlow degrees.

3. If the eye be fixed at a greater diſtance than the principal focus; the apparent magnitude of an object is increaſed, as it is removed from the glaſs; till

Fig. till it comes to the conjugate focus, in respect to the eye; and then it becomes infinite, and infinitely confused, and begins to be inverted; and going further off, it is diminished again.

4. If the eye and object be fixt, and a convex lens be moved from the object to the eye; the apparent magnitude of the object increases to the middle, and then decreases to the eye. When it comes into such a position, that the eye and object are conjugate foci, the object is infinitely confused.

5. If the eye and object be fixt, and a concave lens be moved from either of them to the other; the apparent magnitude of the object will decrease to the middle, and then increase again.

The apparent distance is reciprocally as the apparent magnitude; and in general we judge the apparent distance of an object to be the very same, as we suppose the distance of a real object to be, from which the rays come to our eyes with the same degree of confusion.

The apparent magnitude, as has been observed before, is in all cases, reciprocally as the distance of the eye from the image, or directly as the angle it subtends; and that whether the rays diverge or converge, or whether the image be before or behind the eye. But the image hardly ever appears distinct in any of these cases.

PROP. XXXVIII.

88. *The brightness of the image pr, formed by the lens* AB *from the luminous object* PR; *will be as* $\frac{AB^2}{Dq^2}$, *the area of the lens directly, and the square of the distance of the image reciprocally.*

For the brightness of the object being given, the

the quantity of light flowing from it, and falling on the lens, and transmitted to the image, will be directly as the magnitude of the object, and that of the lens, and reciprocally as the square of the distance. Therefore the light falling on the picture rp, is as $\frac{PR^2 \times AB^2}{QD^2}$. But the density of the rays, or the brightness of the image, is as the quantity of light directly, and the area reciprocally, that is, as $\frac{PR^2 \times AB^2}{QD^2 \times rp^2}$. But by similar triangles (Prop. XXXI) $\frac{PR^2}{pr^2} = \frac{QD^2}{qD^2}$; therefore the brightness is as $\frac{AB^2 \times QD^2}{QD^2 \times qD^2} = \frac{AB^2}{qD^2}$. Fig. 88.

Cor. 1. *If the brightness of the object be increased in any proportion, which call* B; *then the brightness of the image will be as* $\frac{AB^2}{Dq^2}B$.

Cor. 2. *In very remote objects, if f be the principal focal distance, then the brightness of the image will be as* $\frac{AB^2}{ff}B$.

For then $Dq = f$.

Cor. 3. *The brightness of the image increases with the area of the glass; but the distinctness of it decreases.*

For it is only the rays very near the vertex, that are refracted to a single point, in the picture; those that are farther off deviate more and more, and so make the picture confused. All this is plain from Prop. X. and XI, where you find different proportions for the focus, when the arch is large and when small, in a single refraction; and the refraction at two surfaces increases the error.

PROP.

Fig.

PROP. XXXIX.

95. *If a convex lens* AB *be held directly to the rays of the sun; and a combustible body be held in the principal focus* P, *the heat of the rays will set it on fire.*

For all the rays of the sun which fall upon the lens, are refracted into the focus, making there the image of the sun. And all these rays being brought into so small a space, must have an intense heat; and the more so, the more rays are brought thither, or the broader the lens is. And by increasing the breadth of the lens, the density of the rays, and the heat thereof may be made so great, as to burn or melt all sorts of bodies placed there; as is evident by experiments.

Cor. 1. *The heat in the focus of the lens, is to the sun's direct heat; as the area of the glass, to the area of the image in the focus.*

For the density or heat is reciprocally as the space it is contained in.

Cor. 2. *The degrees of heat in the foci of different lenses; are as the squares of the diameters directly, and the squares of the focal distances reciprocally.*

For the heat is as the brightness of the sun's image, that is (by Prop. XXXVIII.) as $\frac{AB^2}{DP^2}$.

SCHOLIUM.

Upon account of the sun's rays meeting in that place, and burning bodies therein, it is called the *focus* or *burning point*; and the lens itself a *burning glass*.

When

When the ſun's rays cannot be collected into a focus ſmall enough to burn briſkly, as in large glaſſes, or thoſe of a long focus; they may be made to paſs thro' a ſmaller lens, held in the converging rays, which will contract them, and bring them into a leſs ſpace in the focus. Fig. 95.

PROP. XL.

If AB *be a plane convex lens, expoſed with the plane ſide to the parallel homogeneous rays* NA, CV. *And if* P *be the principal focus, or that of rays falling near* V. *and* F *the focus of the ray* AF. *m, n the ſines of incidence and refraction out of a rare into a denſe medium,* $x =$ DV, *the verſed ſine of the arch* AV. *Then the aberration* PF $= \frac{mm}{n \times \overline{m - n}} x$. 96.

From the center C draw CN, CM perp. to the rays NA, MP; and put CV $= a$, DV $= x$, CP $= z$. Then $AD^2 = 2ax - xx$, $DP^2 = \overline{z - a + x}^2 = zz + 2xz - 2az + xx - 2ax + aa$, and $AP^2 = (AD^2 + DP^2 =)\ zz + 2xz - 2az + aa$. By ſimilar triangles, AP^2 $(zz + 2xz - 2az + aa.)$: CP^2 (zz) : : AD^2 or CN^2 (nn) : CM^2 (mm), whence $nnzz = mmzz + 2mmxz - 2mmaz + mmaa$, and by reduction, $z = \frac{mma - mmx}{mm - nn} + \frac{m\sqrt{nnaa - 2mmax + mmxx}}{mm - nn}$, and putting $dd = mm - nn$, and extracting the root, $z = \frac{mm}{dd} \times \overline{a - x} + \overline{\frac{m}{dd} \times na - \frac{mm}{n} x - \frac{ddmmxx}{2n^3a}}$ &c. $= \frac{mma + mna}{dd} - \frac{mmn + m^3}{ndd} x - \frac{m^3}{2n^3a} xx$ &c. = (becauſe $dd =$

 $m +$

Fig. 96. $\overline{m+n} \times \overline{m-n} \Big\} \frac{ma}{m-n} - \frac{mm}{n \times \overline{m-n}} x - \frac{m^3}{2n^3a} xx$

&c. = CP. But when $x = 0$, then CF $= \frac{ma}{m-n}$.

Therefore CF — CP or PF $= \frac{mm}{n.\overline{m-n}} x + \frac{m^3}{2n^3a} xx$

&c. $= \frac{mm}{n.\overline{m-n}} x$, nearly. Here the rays being perp. to the plain ſurface AB, ſuffer no refraction; and therefore it is the ſame thing, as if the rays were only refracted at the ſpherical ſurface AV.

Cor. 1. *Putting* AD $= y$, *the aberration by the figure of the lens, that is,* PF $= \frac{mmyy}{2an.\overline{m-n}}$.

For $yy = 2ax - xx = 2ax$ nearly, and $x = \frac{yy}{2a}$.

Cor. 2. *The aberration by the ſphericalneſs of the figure, is as the verſed ſine, or as the ſquare of the cord, of half the arch* AV.

Cor. 3. *The aberration in length* PF, *of a plano convex lens, is* $4\frac{1}{2}$ *times its thickneſs, nearly.*

For $m = 3$, $n = 2$, and $\frac{mm}{n.\overline{m-n}} x = \frac{9}{2} x = 4\frac{1}{2}x$.

Cor. 4. *The lateral aberration* FG *correſponding to* PF, *is* $= \frac{mm}{nn} \times \frac{y^3}{2aa}$.

For CF $= \frac{ma}{m-n}$, and VF $= \frac{ma}{m-n} - a = \frac{na}{m-n}$. And by ſimilar triangles PD or FV $\left(\frac{na}{m-n}\right)$: AD (y) : : PF $\left(\frac{mm}{2an.\overline{m-n}} yy\right)$: FG $= \frac{mm}{nn} \times \frac{y3}{2aa}$.

Cor.

Cor. 5. *The aberration* PF $= \frac{mm}{\overline{m-n}^2} \times \frac{AD^2}{2VF}$, Fig. 96. *and the correspondent lateral aberration* FG $= \frac{mm}{\overline{m-n}^2} \times \frac{AD^3}{2VF^2}$.

For (Prop. XIII.) the rays going into a rarer medium, $n : m :: VF : CF$. And $n : \overline{m-n} :: VF : CV$; whence $n \times CV$ (or na) $= \overline{m-n} \times VF$. Therefore PF $= \frac{mm \times yy}{2an \times \overline{m-n}} = \frac{mm \times yy}{\overline{m-n} \times 2VF \times \overline{m-n}}$.

And FG $= \frac{mm}{nn} \times \frac{y^3}{2aa} = \frac{mm \times y^3}{2 \times \overline{m-n}^2 \times VF^2}$.

Cor. 6. *In a double convex lens, of the same focal distance; the aberrations will be nearly the same as in the plano convex.*

For the rays AP, VF will be nearly of the same length as before; and therefore their difference, or the aberration will be the same.

Cor. 7. *If the rays don't come parallel, but diverging, the aberration will be something greater; and converging something less; but may be taken for the same.*

Cor. 8. *If parallel rays (or any others nearly) fall upon the plane side of a plano convex lens, the diameter of the least circle of aberration, is* $\frac{1}{4}$ *the aberration made at the principal focus; or* $2QI = \frac{1}{2}FG = \frac{mm}{nn} \times \frac{y^3}{4aa} = \frac{mm}{\overline{m-n}^2} \times \frac{AD^3}{4VF^2}$.

For this is the least, when $VE = \frac{1}{2}VB$, and EV cuts AG in Q. And is demonstrated exactly the same way as Prop. XXIV. B. II. And hence

Cor. 9. *The circle whose diameter is* 2QI, *contains all the rays refracted by the lens, between* A *and* B.

Fig. 96. For EQ cuts AP in Q, at the greatest distance from the axis VF.

Cor. 10. *Hence if the principal focal distance is given; the lateral aberrations are as the cubes of the breadths of the lens. And if the breadth of the lens be given, the lateral aberration is retiprocally as the square of the focal distance.*

Cor. 11. *If the focal distances and apertures of a reflecting concave, and a convex lens, be the same. The diameter of the circle of aberration caused by their figures, will be above 30 times less in the reflector than in the refractor.*

For (by Cor. 1. Prop. XXIV. B. II. and Cor. 8, of this); these diameters are $\frac{B^3}{4RR}$, (where f the focal distance $= \frac{1}{2}R$), and $\frac{mm}{nn} \times \frac{y^3}{4aa}$ (where $f = 2a$), and $B = y$. And these are as $\frac{B^3}{16ff}$ and $\frac{mm}{nn} \times \frac{y^3}{ff}$; that is, as $\frac{1}{16}$ to $\frac{mm}{nn}$ or as 1 to $\frac{16mm}{nn}$, or as 1 to $\frac{16 \times 9}{4}$ or 36.

PROP. XLI.

97. *Let the sine of incidence, going out of a dense medium be n, the sines of refraction, (into a rare medium) of the least, the mean, and the most refrangible rays be p, m, q. Then if a plano convex lens be exposed with the plain side to the sun; the diameter of the circle of aberration* IK *(by the different refrangibility), is to the diameter of the lens* AB; *as* $q - p$, *to* $q + p - 2n$.

Because all the rays fall perp. on AB, they are only refracted by the surface AVB. Draw the radius

dius CAL, and the axis CVF, and RAG, SBH parallel to CV. And let AI*f* and BK*f* be the least refrangible rays, and AFK, BFI, the most refrangible. Thro' I, K draw LH which will be perp. to C*f*. Now since the arch AV is supposed to be very small, the angle ACV is very small, and consequently the angles LAG, LAI, LAK are likewise very small; and consequently the lines LG, LI, LK are nearly as the sines of these angles; therefore if LG $= n$, then will LI $= p$, LK $= q$: For LAG or RAC is the angle of incidence. Hence GI $=$ (LI $-$ LG $=$) $p - n$, IK $=$ (LK $-$ LI $=$) $q - p$. And IO $= \frac{1}{2}$IK $= \frac{q-p}{2}$. Therefore GO or AD $=$ (GI $+$ IO $=$) $p - n + \frac{q-p}{2} = \frac{p+q-2n}{2}$; and 2AD $= p + q - 2n$. Therefore 2AD or AB : IK : : $p + q - 2n : q - p$. And all the rays between A and B, pass thro' IK. Fig. 97.

Cor. 1. *Diameter of the circle of aberration* IK : *diameter of the lens* AB : : $\frac{q-p}{2} : m - n$.

For $p + q = 2m$, and IK : AB :: $q - p : 2m - 2n : \frac{q-p}{2} : m - n$.

Cor. 2. *The aberration* F*f* : *focal distance f*D : : $q - p : m - n$.

For by similar triangles, *f*O : OI : : *f*D : AD; and 2*f*O or *f*F : 2OI or IK : : *f*D : AD or $\frac{1}{2}$AB. And *f*F : *f*D : : IK : $\frac{1}{2}$AB : : $\frac{q-p}{2} : \frac{m-n}{2}$: : $q - p : m - n$.

Cor. 3. *In a plano convex glass the diameter of the circle of aberrations, or that which cuts all the rays, is the 55th part of the diameter of the glass. And the*

Fig. 97. *the aberration in length, is the 27th or 28th part of the focal distance.*

For in glass $n = 50$, $p = 77$, $q = 78$. And AB : IK : : $m - n$ ($27\frac{1}{2}$) : $\frac{q-p}{2}$ ($\frac{1}{2}$) : : 55 : 1. And fD : Ff : : $m - n$ ($27\frac{1}{2}$) : $q - p$ (1).

Cor. 4. *The diameter of the circle of aberrations, in which all the rays are contained, that affect the sense, is hardly the 200th part of the diameter of the glass.*

The foregoing computation takes in all the rays, but since they are exceeding thin toward the circumference of the circle of aberrations, and exceeding dense near the center; not above a quarter of that makes any sensible impression. And therefore 4 × 55 or 220 to 1 will now be the ratio of AB to KI.

Cor. 5. *In different glasses, the aberrations are as the diameters of the glasses. And the angles of aberration are as the breadth of the glasses directly, and the focal distance, inversely.*

96. 97. Cor. 6. *Hence if b be the breadth of the lens, f the focal distance; the aberration by the figure of the lens, is to the aberration by the different refrangibility; as* $\frac{mm}{m-n} \times \frac{bb}{16ff}$ to $q - p$.

For Cor. 8. Prop. XL.) the diameter by the figure is $\frac{mm}{\overline{m-n}^2} \times \frac{AB^3}{8 \times 4VF^2} = \frac{mm}{\overline{m-n}^2} \times \frac{b^3}{32ff}$. And the diameter by the aberration (by Cor. 1. of this) is $\frac{q-p}{2 \times \overline{m-n}} \times b$. Divide both by $\frac{b}{2 \times \overline{m-n}}$, and you have the ratio as above.

Cor.-

Cor. 7. *In the glasses of telescopes, the error caused by the figure of the glasses, is quite inconsiderable, and may be reckoned as nothing, in respect of the error by the different refrangibility.* Fig. 96. 97.

For in glass $n = 50$, $p = 77$, $m = 77\frac{1}{2}$, $q = 78$, and the error by the figure, is to the error by the different refrangibility, as $\frac{13.65bb}{ff}$ to 1. For $q - p = 1$, and $\frac{mm}{m-n} \times \frac{bb}{16ff} = \frac{77\frac{1}{2} \times 77\frac{1}{2}}{27\frac{1}{2}} \times \frac{bb}{16ff} = \frac{31 \times 77\frac{1}{2}}{11} \times \frac{bb}{16ff} = \frac{31 \times 155}{11 \times 32} \times \frac{bb}{ff} = 13.65 \times \frac{bb}{ff}$.

Ex. 1.

Suppose $b = 4$ inches, $f = 100$ feet $= 1200$ inches, then $\frac{13.65bb}{ff} = \frac{13.65 \times 16}{1440000} = \frac{218.4}{1440000}$, and the error by the figure is to the error by refraction, as 218.4 to 1440000, or as 1 to 6593. And if the rays that affect the sense be only a quarter of this, (as in Cor. 4.), the ratio becomes as 1 to 1648.

Ex. 2.

Suppose $b = 2$ inches, $f = 240$ inches; and $\frac{13.65bb}{ff} = \frac{13.65 \times 4}{240 \times 240} = \frac{13.65}{120 \times 120} = \frac{13.65}{14400} = \frac{1}{1055}$; and these errors as 1055 to 1. And if we reckon only the mean rays; it will be no less than 263 to 1; a trifling quantity for the figure of the glass.

From hence it appears, that the lesser the focal distance of the glasses are, the more considerable is the error proceeding from the figure of the glass. And therefore in microscopes, the aberration arising

Fig. 96. 97. from the ſpherical figure of the glaſſes, may have a ſenſible effect; by reaſon of the ſmallneſs of the ſpheres, and the large apertures required therein.

Cor. 8. *If the breadth of a glaſs lens be $\frac{2}{3}$ the diameter of the ſphere; the aberration cauſed by the figure, is nearly equal to the aberration cauſed by the different refrangibility of the rays.*

For by Cor. 6. the aberration by the figure is to the aberration by the different refrangibility; as $\frac{mm}{m-n} \times \frac{bb}{16ff}$ to $q-p$. Put them equal, then $\frac{mm}{m-n} \times \frac{bb}{16ff} = q-p$, or in numbers, $\frac{9}{1} \times \frac{bb}{16ff} = 1$. And $9bb = 16ff$. And extracting the root, $3b = 4f = 4 \times$ radius in a double convex $= 2$ diameters, and $b = \frac{2}{3}$ the diameter.

Cor. 9. *The aberration in any lens by the different refrangibility, will be nearly the ſame, as in a plano convex of the ſame focus.*

For in a double convex of equal radii, the refraction at each ſurface will be but half ſo much as at the convex ſurface of the plano convex, which has double the curvature.

SCHOLIUM.

Altho' glaſſes formed into the figures of the conic ſections or any other curves, could refract the rays accurately to one point. Yet ſince no method has been found out to give them theſe figures, by grinding them into their proper forms; and a glaſs may be very truly ground into the form of a ſphere. Therefore Opticians are obliged to make uſe of ſpherical glaſſes upon all occaſions. And if we had glaſſes in the form of any curve, we chuſe, yet none

none of them can, in the leaſt, alter the different refrangibility of the rays. Neither can any curve refract the rays iſſuing from the collateral parts of an object, to a ſingle point. And therefore ſince all the errors of glaſſes are to be attributed ſolely to the different refrangibility of the rays. Therefore ſpherical ſurfaces may be of the ſame uſe as the beſt curves; and being ſo eaſily made, they are more commodious for dioptrical uſes, than any other curves whatever.

Fig. 96. 97.

BOOK

BOOK IV.

The Combination of GLASSES; *and the Construction of* TELESCOPES *and* MICROSCOPES, *and other Optical Instruments.*

PROB. I.

Fig. *To explain the Nature and Construction of the Eye.*

AS the sense of seeing is the noblest sense belonging to an animal, without which he would live in perpetual darkness, unable to perform the necessary exercises of life; and since all that has been demonstrated of glasses, and will hereafter be demonstrated of all optical machines, tend only to this single end, to help and improve this sense of seeing. And since the eye is the organ, or instrument by which vision is performed; it is by its nature an optical instrument, and the foundation of all others. And therefore it cannot be amiss to give a short description thereof.

98. ABCE is the eye, its figure spherical; by reason of which, it is easily moved any way in its socket. The fore part at A is more convex than the rest. It is contained in three membranes, the outermost is the *Sclerotica*; the second the *Tunica choroides*; the fore part of it is called the *Iris*, which consists of many fibres like so many radii. The third or inner-

Fig. 86.

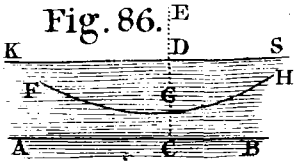

87.

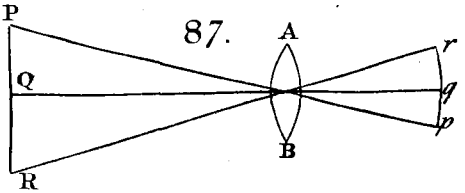

88.

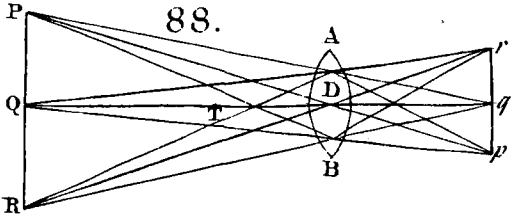

89.

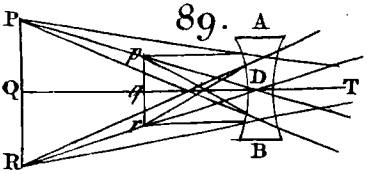

90.

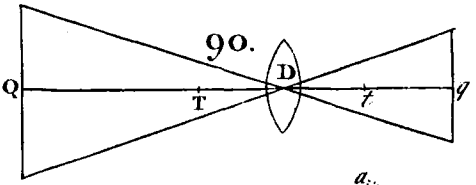

91.

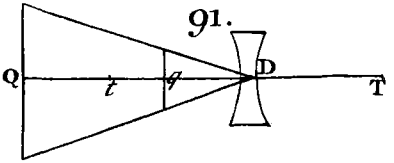

92.

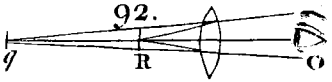

93.

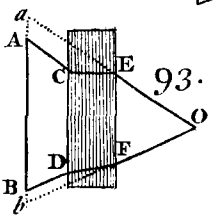

94.

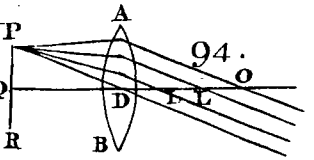

95.

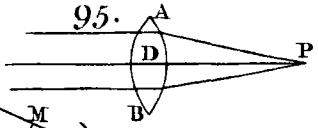

96.

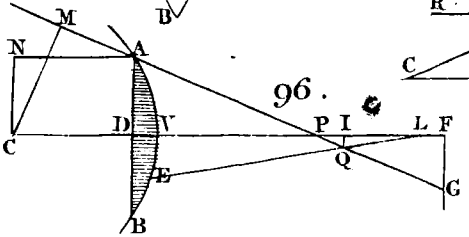

97.

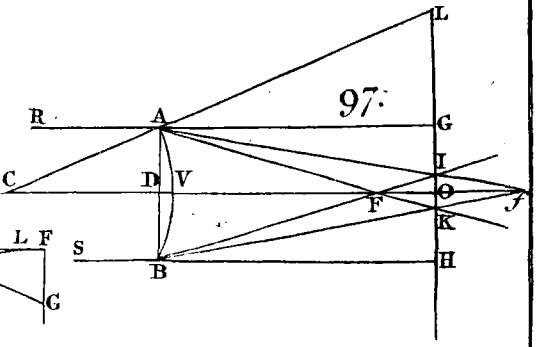

innermost is called the *Retina*, which is nothing but the optic nerve, spread over the bottom of the eye. Fig. 98.

In these are contained the three humours of the eye; the first is HAI, called the *Aqueous* humour, which is a thin liquor like water. The second is FG the *Christalline*, in the form of a lens, more convex behind towards C. Adjoining to this is the third KL, called the *Vitreous* humour.

The christalline is more dense than the vitreous, and the vitreous more dense than the aqueous humor, and all together make a compound lens, which refracts the rays of light, issuing from an object PR, to the bottom of the eye, and there paints its image *pr* in the focus upon the retina, inverted.

The figure of the aqueous humour is a meniscus, and so is that of the vitreous. The fore part of the sclerotica is called the *Cornea*, and that part adjoining to it, is called the *White* of the eye. Within the cornea is a coat called the *Uvea*; in the middle of this is a hole O called the *Pupil*, to let in the rays of light. And the pupil is contracted or dilated by several muscular fibres in the uvea or iris, according as more or less light falls on the eye, and that by an involuntary motion.

D is the optic nerve going from the retina to the common sensorium in the brain, where these images are perceived. This is not in the middle of the eye, but lies nearer the side E, which is towards the nose.

Round the edge of the christalline FG, is a ring of fibres, by help of which the distance AC is made longer or shorter, in order to bring the image *pr* upon the retina, for distinct vision. And perhaps these fibres also make the christalline more or less convex at the same time. This ring of fibres is called the *Ligamentum ciliare*; and its back part is

Fig. 98. is black, to ſtifle the rays that are reflected upon it.

The eye is moved in the head by ſeveral muſcles inſerted in the ſclerotica, ſo that it may be quickly directed to any object.

If the image of an object does not fall upon the retina at *pr*, the viſion will be confuſed. If it fall ſhort, or nearer FG; then a concave lens that makes the rays more diverging will bring them to the retina. This is the caſe of purblind or ſhort-ſighted people, who are forced to look very near an object; or elſe they muſt uſe concave ſpectacles.

If the rays do not unite till they get beyond the retina, as in moſt old people; then a convex lens of a due focus, held between the eye and object, will make them converge, and fall upon the retina. Therefore long-ſighted people muſt uſe convex ſpectacles.

Altho' the image is painted inverted in the eye, yet we judge it erect; becauſe we always find it ſo by cuſtom and experience.

The diameters of images at the bottom of the eye, as *pr*, are proportional to the angles which the objects ſubtend at the eye, as POR; the ſame as in a lens; and are reciprocally as the diſtances of the ſame object viewed in different places.

The eye is in reality no more than a camera obſcura, for the rays of light flowing from all the points of an object, thro' the pupil of the eye, do by the refraction of the humours of the eye, paint the image thereof in the bottom of the eye. Juſt ſo it is in the camera obſcura, where all the rays refracted by a lens in the window ſhut, or paſſing thro' a ſmall hole in it, paint the image on the oppoſite wall. Some properties of the eye are theſe.

1. The eye can only ſee a very ſmall part of an object diſtinctly at once. For the collateral parts of

of an object are not represented distinctly in the eye; and therefore the eye is forced to turn itself successively to the several parts of the object it wants to view, that they may fall near the axis of the eye, where alone distinct vision is performed. Fig. 98.

2. When any point of an object is seen distinctly with both eyes, the axes of both eyes are directed to that point and meet there. And then the object appears single tho' lookt at with both eyes. For the optic nerves are so framed, that the correspondent parts in both eyes, lead to the same place in the brain, and give but one sensation; and the image will be twice as bright with both eyes as with one. But if the axes of both eyes are not directed to the object, that object will appear double, as the pictures in the two eyes do not fall upon correspondent or similar parts of the retina.

3. The best eye can hardly distinguish a particle of matter that subtends at the eye, an angle less than half a minute. And very few can distinguish it when it subtends a minute. If the distance of two stars in the heavens be not greater than this, they will appear as one.

4. Young people can see nearer hand than old people; for as men grow old their eyes grow flatter; and to collect the rays of light at the retina, the object must be placed further off. And this is the reason that short-sighted people as they grow older see at a greater distance.

5. Tho' men may see distinctly at different distances, by altering the position and figure of the christalline, yet they can only see distinctly within certain limits, and nearer than that, objects appear confused. But these limits are not the same in different people. A good eye can see distinctly, when the rays fall parallel upon it; and then the principal focus is at the bottom of the eye.

6. If

Fig. 98. 6. If a good eye views an object at the least distance it can be seen distinctly, and then at twice that distance, and then at an infinite distance; there is about the same alteration made in the figure of the eye between the two last cases, as there is between the two first.

7. If a short-sighted person can see an object distinctly at two distances, whereof one is double the other. As great an alteration must be made in the figure of their eyes to see it at an infinite distance, as there was made for the first two distances; or as great an alteration as is made in a good eye, to see distinctly from the greater distance to infinity. And therefore a short-sighted person can see distinctly at all distances with a single concave glass, of a proper figure. And hence the cause of short-sightedness is not a want of power to change the figure of the eye; but that change is not great enough to accommodate it to all distances, taken from a point so near the eye.

8. A man can judge of a small distance with a single eye, by frequently observing how much variation is made in the eye to make the object distinct; and from this a habit of judging is acquired. But this cannot be done at great distances, because tho' the distance be varied, the change in the eye becomes then insensible.

9. But a man can judge of greater distances with both eyes, than he can with one eye. For the eyes being at a distance from one another, as long as that distance has a sensible proportion to the distance of the object, one gets a habit of judging, by the position of the two axes of the eyes, which are always directed to that point. For different distances require different positions, of the axes, which depends on the motions of the eyes which we feel. But in very great distances, no judgment can be made from the motion of the eyes,

eyes, or their internal parts. Therefore we can only guess at the distance from the magnitude, colour, and the position of interjacent bodies. Fig. 98.

10. Whatever light falls upon that part of the retina, where the optic nerve D, springs, makes no impression; and therefore if the picture of an object falls thereon, it is not perceived, and so that object is invisible. This will appear by placing a small bright object before you, and looking at it with one eye, and moving your eye laterally towards the contrary side (towards the left, if it be the right eye), the object will disappear, and seem to be lost; and moving it still further, it will appear again. Now this place is not at the bottom of the eye, but nearer the nose in both of them; so that no rays either parallel or diverging, that come from any object, can fall upon that place in both the eyes; so that any object we direct the eyes to, will always be visible, at least to one eye. But the same bright object may be made to disappear to both eyes, by directing the axes of both eyes to a point a little beyond the nose, to be found by trials.

11. Dimness of sight generally attend old people, and this may arise from two causes, 1. by the eyes growing flat, and not uniting the rays at the retina, which causes indistinctness of vision; or, 2. by the opacity of the humours of the eye, which in time lose their transparency in some degree; from whence it follows that a great deal of the light is stopt and lost, that enters the eye; and every object appears faint and dim.

12. As the rays of light flowing from an object, and painting its image upon the retina, is the immediate cause of seeing. So where there is no light, there can be no vision; consequently without light, the eye becomes a machine utterly useless;

Fig. 98. uſeleſs; as it can give us no manner of information of the exiſtence of bodies at a diſtance from us.

PROB. II.

To find the places and poſitions of the images formed by ſeveral lenſes, or reflectors.

There may be an infinite number of caſes, of this problem, according to the number of lenſes and their diſtances from one another; but any of them may be ſolved in general thus.

Draw a right line thro' the centers of all the lenſes, for their common axis. Then having the poſition of the object, find the focus of the firſt glaſs, or the place of the firſt image. This being had, and the place of the ſecond lens; find the other focus, or the conjugate focus of the ſecond lens, or the place of the ſecond image. This being found, and the place of the third lens; find its conjugate focus, or the place of the third image, and ſo on from one to another, as long as there are any lenſes, till you get the laſt image.

The places of the images being known, their poſition as to their being erect or inverted may be found thus. Take a point in the object above the axis, from which draw a line thro' the center of the firſt glaſs, and continue it to the focus, there you will have the firſt image of that point, and if it is above the axis it is erect; but if below, 'tis inverted. From that point draw a line thro' the center of the ſecond glaſs, to the ſecond image, and that gives the ſecond image of that point, which image is erect or inverted, according as that point is above or below the axis. After the ſame manner purſue the ray thro' the third glaſs, and then thro' the fourth glaſs, and ſo on to the laſt, where if the laſt image of the ſaid point be above

above the axis, the image is erect; if below, it is inverted. If there be any reflectors, purſue the ray, after the ſame manner, to the reſpective foci. The ſhorteſt way to find the conjugate foci, of all the glaſſes, ſucceſſively, is to get the principal foci firſt; and then theſe will be had by Prop. XXI. Book III. Fig.

Ex. 1.

Let AB be a reflecting concave, PQ an object, draw the axis QD, and find the focus *q*. From P the higheſt point of the object, draw PD, and the reflected ray D*p*, then *p* is the image of P, and *pq* the image of PQ; and ſince *qp* is below the axis, the image is inverted. 99.

Ex. 2.

Let A, B, C, be three lenſes, PQ an object. Draw QH the common axis of all the lenſes; in the axis QH find the conjugate foci Q, F, of the lens A; and F, G, the conjugate foci of the lens B; and laſtly G, H the conjugate foci of the lens C. Take the point of the object P above the axis, and thro' A the center of the firſt lens, draw PA, and continue it to L at the focus F; then L is the image of P. Again, draw LBM thro' the center B of the ſecond lens, to the focus G; then M is the image of L, or the ſecond image of P. Laſtly, draw MCN thro' the center C of the third lens, to the focus at H; and N is the image of M, or the third image of P. And becauſe HN lies below the axis, or contrary to the poſition of PQ, the laſt image is inverted. 100.

Ex. 3.

Let A, B, C, D, be four lenſes, PQ an object. Draw QK the common axis of all the lenſes. In this axis find the conjugate foci Q, F, of the firſt lens; F and G, the conjugate foci of the ſecond 101.

Fig. 101. lens; G and H, the conjugate foci of the third lens; lastly, H and I the conjugate foci of the fourth lens, which is a concave. Take a point of the object P, above the axis, and draw PAL thro' the center of the first lens to the focus F; then L is the image of P. Draw LB to the center of the second lens, cutting the perpendicular GM, at the focus G, in M; then M is the image of L, or the second image of P. Here the rays, which by the glass A, converged to L; by the glass B are made to converge to M. Again, draw MCN thro' the center of the third glass, to cut the perp. HN at the focus H, in N; and N is the image of M, or the third image of P. Lastly, draw ND to the center of the fourth glass, cutting the perp. IO, at the focus I, in O; and O is the image of N, or the fourth image of P. Here the rays diverging from N, and falling on the concave glass D, are made to diverge from O; just as the rays diverging from H, are made to diverge from I. And since IO is on the same side of the axis, as the object PQ, it will appear to be erect.

And thus the rays proceeding from an object, may be traced thro' any number of lenses, to the place of the last image.

Cor. 1. *Hence, if part of the rays are stopt by the way, what remains will belong to the same focuses as before; and the same images will be made by these partial pencils of rays that remain.*

For in the oblique pencils, a great many rays miss the following glasses, and are lost; and the more so, the more oblique they are. But that does not affect the rest, which will still go to their own focus.

Cor. 2. *Hence the proportion of the last image to the object is easily found. And that is, as* IO : PQ : :

so

so AF × BG × CH × DI : *to* QA × BF × CG × DH. Fig. 101.

For PQ to IO is compounded of the ratio of PQ to FL, FL to MG, MG to HN, and HN to IO; that is, of QA to AF, BF to BG, CG to CH, and DH to DI; or of QA × BF × CG × DH to AF × BG × CH × DI.

Cor. 3. *Likewise the apparent magnitude of the last image* IO *seen from any point* K :
is to the apparent magnitude of the object PQ *seen from* A, *with the naked eye* : :
as DI × CH × BG × AF :
to KI × DH × CG × BF.

For the apparent magnitude of IO, to the apparent magnitude of PQ, is as the angle IKO to the angle QAP. But IKO to QAP is compounded of the ratios of IKO to IDO, and IDO or HDN to HCN, and HCN or GCM to GBM, and GBM or FBL to FAL or QAP; that is, of the ratios of DI to KI, and CH to DH, and BG to CG, and AF to BF; or as DI × CH × BG × AF to KI × DH × CG × BF.

Cor. 4. *Therefore where there are but three lenses,* A, B, C; *and the eye at* C. *The apparent magnitude of the last image* GM : *is to the apparent magnitude of the object* PQ *seen from* A : : *as* BG × AF : *to* CG × BF.

PROB. III.

To find the place of the eye, where the visible area of the object is the greatest, when seen thro' several glasses. 102.

This will be in the place where the axes of all the pencils meet. Suppose A the centre of the first glass, to be a radiant point, and that the rays issuing from A, are refracted successively by all the

Fig. 102. glasses BC, EF, &c. Then find the focus G made by refraction at the last glass EF; and G is the place of the eye. And this is found after the manner of the last Prob. by finding the conjugate foci A, D, for the glass BC; and then the conjugate foci, D, G, for the glass EF, and so on to the last, which is done either by Prop. XXI. or Cor. 2. Prop. XX. of Book III.

For since the glass A is the common base of all the pencils of rays that come from the object; the axis of every pencil, LA, OA, NA, will pass streight thro' the center A of the glass, and LAC, OAD, NAB, &c. will be right lines. Therefore A is the radiant point from which all these axes proceed. Therefore it follows of course, that all these axes or middle rays intersect again in the several foci D, G &c. And consequently if the eye be placed at the last focus G, it will receive all these middle rays, and besides as many of the collateral rays of every pencil, as the breadth of the pupil can admit. Therefore the visible area of the object will be greatest, when the eye is in the focus G. For if the eye be supposed at any other place, the eye will take in less, because the section of all the rays becomes greater; (for it is the very least at D), and fewer of them will fall on the pupil.

Cor. 1. *If the last glass* EF *be a concave, the eye must be put close to the glass.*

For its focus G will fall between the glass EF and the point D; and the rays coming from it thro' the glass will diverge, and the section of the rays, on the outside of the glass, will be the least nearest the glass.

Cor. 2. *The focus of the axes, of all the pencils, is a quite different thing from the focus of any one pencil.*

For

For the former has its radiant point in the centre of the first glass; and the latter, in the object itself. Fig. 102.

Cor. 3. *For the same reason, if* A *be a concave reflector, and* A, D, *conjugate foci to* BC; D *will be the intersection of all the axes of the several pencils, or the place of the eye.*

PROB. IV.

Having given AF, *the least distance that a long-sighted person can see distinctly; or the greatest distance a short-sighted person can see distinctly; and* AQ *the distance he wants to see distinctly. To find the radius of a glass fit for that purpose.* 103. 104.

Let AC be the radius of a double convex, or double concave; take $AC = \frac{AF \times AQ}{AF - AQ}$, for the radius of a convex lens, for the long-sighted person; or for the radius of the concave, for the short-sighted person.

For if C be the principal focus of the double convex, or double concave lens; or which is the same thing, CA = the radius of the sphere (by Art. 1. Schol. Prop. XIX. B. III.) Then (Prop. XXII. ib.) $QF : QA :: AF : CA = \frac{AF \times AQ}{QF} = \frac{AF \times AQ}{AF - AQ}$. Then the rays that come from Q, will enter the eye of the long-sighted person, as if they came from F, and will therefore make the object at Q appear distinctly (fig. 103.) and the rays proceeding from Q (fig. 104.), will enter the eye of the short-sighted person, as if they came from F; and will therefore make the object at Q appear distinctly to him, when AC the radius of concavity $= \frac{AF \times AQ}{AF - AQ}$, or $\frac{AF \times AQ}{AQ - AF}$.

Fig. 103. Cor. 1. *A long-sighted person that cannot see distinctly nearer than* F; *cannot see distinctly nearer than* Q, *by help of the glass* BD *But from* Q *to* C, *or further, he can see distinctly.*

For as F approaches the glass, Q approaches it (Cor. 2. Prop. XXXV. B. III.); but nearer than F, the object is confused; therefore nearer than Q, the image is confused. But beyond F it is distinct, therefore beyond Q it is distinct.

Cor. 2. *If the long-sighted person can only see objects distinctly, which are very remote; then he must have a convex lens whose focal distance is* AQ, *to see objects distinctly at the distance* AQ.

For in this case the radius is $\frac{AF \times AQ}{AF} = AQ$, because AF is infinitely greater than AQ.

104. Cor. 3. *A short-sighted person that cannot see distinctly further than* F; *cannot see distinctly further than* Q, *by help of the concave glass* BD. *But can see distinctly from* Q *to* F, *or nearer.*

For as F and Q both recede from the glass; and beyond F, the object is confused, so is the image beyond Q; but on this side of Q it is distinct.

Cor. 4. *If* AF *be the greatest distance, a short-sighted person can see distinctly; then by help of a concave, whose radius or focal distance is* AF, *he will be able to see all remote objects, to infinity.*

For in this case AQ is infinite, and the rays from Q will be parallel; and consequently F is the focus of these parallel rays, and FA the radius of the glass. And in all remote objects, the rays are nearly parallel.

Cor. 5. *From these rules a man may be fitted with the most proper spectacles, tho' he lives at a distance from*

from the maker; by sending him the focal distances. Fig. *But if glasses are at hand, he may be better fitted by trial; taking notice to chuse those that are the least convex or concave that will fit him. These will prevent a person from growing more long-sighted or short-sighted, for some time.*

SCHOLIUM.

When glasses are put into frames for spectacles, these frames ought not to be streight, so as both eyes may lie in the same plane; but they ought to be so bent in the middle, that the axes of both glasses may be directed to one point, at such a distance as you generally look with spectacles. By this means the rays will fall perp. upon both glasses, and make the object appear distinct. But if they fall obliquely upon the glasses, it will cause a confused appearance in the objects. Therefore the shape of the frame ought to be as represented in fig. 105, where AB is the plane where one glass is 105.
fixt, and CD the other.

Spectacles are the most useful optical machine in the world. Few people that grow into years, but have occasion for them, to help their defective eyes, which without them would be useless, in a great many occasions in life.

PROB. V.

To make a concave speculum HD *of a given thickness* BD, *and whose inner radius* AB *is given; that shall reflect parallel rays* RH, *to the same focus* F, *from both surfaces* BH, DI. 106.

It is plain, that the ray which is reflected from the hindmost surface, will be twice refracted. For RH is first refracted at H to the focus *f*, and then

Fig. 106. reflected at I to the focus G, and lastly refracted at L to the focus F.

Let AB $= a$, BD $= t$, DG $= x$, radius CD $= z$; m, n the sines of incidence and refraction. Then to find f, the focus of the refracted ray HI; we shall have (by Cor 1. Prop XIII. B. III.) $m - n : m :: \text{AB}\ (a) : \text{B}f = \frac{ma}{m-n}$; put $q = \frac{m}{m-n}$. Then to find the reflected ray IG, (by Prop. V. B. II.) $\text{C}f\ (qa + t - z) : \text{CG}\ (z - x) :: \text{D}f\ (qa + t) : \text{DG}\ (x)$. Whence $qax + tx - zx = qaz - qax + tz - tx$; and when reduced $x = \frac{qaz + tz}{2qa + 2t - z} =$ DG, and BG $= x - t = \frac{qaz + 2tz - 2qat - 2tt}{2qa + 2t - z}$. But (Prop. VI. B. II.) BF $= \frac{1}{2}a$. And supposing the refracted ray ILF to go back again, and be refracted along LI, whose focus is G; then (Cor. 1. Prop. XI. B. III.) $m \times \text{BF} + n \times \text{AF} : m \times \text{BF} :: \text{AB} : \text{BG}$. That is $\frac{1}{2}ma + \frac{1}{2}na : \frac{1}{2}ma :: a : x - t$, or $m + n : m :: a : \frac{qaz + 2tz - 2qat - 2tt}{2qa + 2t - z}$, and $\overline{ma \times 2qa + 2t - z} = \overline{m + n \times qaz + 2tz - 2qat - 2tt}$. And putting $s = \frac{m}{m+n}$, we shall have $qaz + 2tz + saz = 2sqaa + 2sat + 2qat + 2tt$, and $z = \frac{2sqaa + 2sat + 2qat + 2tt}{qa + sa + 2t}$, and if m, and n be 3 and 2, then $z = \frac{9aa + 18at + 5tt}{9a + 5t}$.

Cor. 1. CD *or* $z = a + \frac{13}{9}t - \frac{tt}{4a}$ *very near; as will appear by division; and therefore if* AD *or* $a + t$ *be subtracted, there will remain* AC $= \frac{4}{9}t$, *nearly.*

Cor.

Cor. 2. *Hence also if z be given and a required, it may be found by resolving the equation* $9az + 5tz = 9aa + 18at + 5tt$. *Or if z and a be given, t may be found from the same equation.* Fig. 106.

Cor. 3. *If such a speculum could be exactly ground, it would be better than any reflecting metal, not only because it would reflect more light, but it would preserve the polish longer. But the difficulty of executing them truly, has prevented the use of them.*

SCHOLIUM.

If instead of 3 and 2, 31 and 20 be put for m and n, as being more exact; we shall find z or CD $= \frac{2qs}{q+s}a + \frac{2qq+2ss}{\overline{q+s}^2}t$, nearly. And if $a+t$ be subtracted, then AC $= \frac{2sq-q+s}{q+s}a + \frac{\overline{q-s}^2}{q+s}t$, nearly. According to this computation, we shall have AC $= .416t$, which is not much different from the former, which was $\frac{4}{9}t$ or $.444t$.

The principal difficulty is to find the vertex of this reflector after it is made, or the point where it is the thinnest. To do this, cover the speculum with a paper, having a hole in it of the bigness the speculum is to be when finished, or when put into a telescope. Then it must be placed at a good distance from a candle, and the image received on a bit of paper just big enough to receive it. And moving the paper cover to all places of the surface, till you find such a position for it, as makes the image the most distinct possible, there fix it; and the middle of the hole is the vertex. For tho' the two surfaces be ground very truly to their proper radii, yet if the centers are not in a right line, passing thro' the middle of the reflector, the two images

Fig. 106. images cannot coincide, and they will confuse one another.

If a concave reflector be made after this manner, it will burn bodies in its focus more fiercely than any other sort; for both the reflected and refracted rays meeting there, conspire to make the effect greater.

PROB. VI.

107. *To make a telescope with a convex and a concave glass, to shew objects erect; called,* Galileo's Telescope.

A Telescope is an optical instrument made by the combination of glasses, for seeing objects at a great distance. The glass next the object, is called the *object glass*; and that next the eye, is the *eye glass*. The *aperture* is the diameter of the hole through which the rays pass. And by reason of the great distance of the object, all rays of the same pencil, incident on the object glass, must be esteemed to be parallel; for the eye can discover no manner of difference between these and parallel rays.

To make this telescope, fix the convex lens AB in the tube AEFB, and the concave lens CD in the tube CGHD, the concave lens must be of a less focal distance than AB, and the tube GD must be made to slide within the tube AF; and the glasses must be so placed, that the axes of the tubes and glasses may coincide; then sliding the tube GD within the tube AF, till the distance of the glasses AC be equal to the difference of their principal focal distances, or that both their principal foci may coincide in the same point P; and then the telescope is fit for use.

The telescope being fitted thus, direct it with the axis RP streight upon the object, and apply the

Fig. 98.

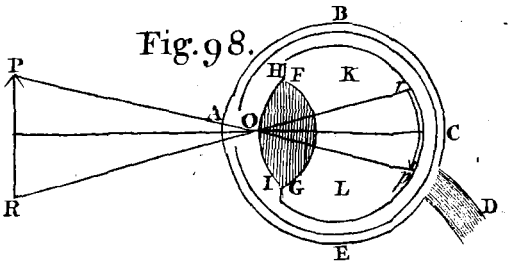

99.

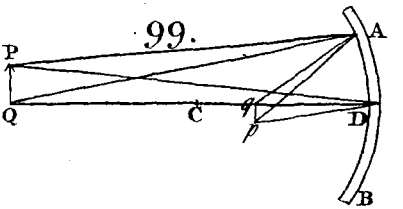

100.

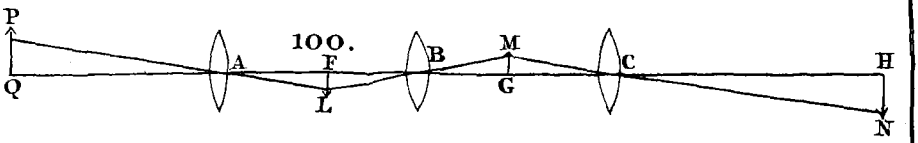

101.

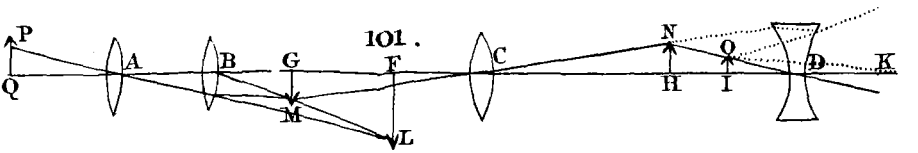

102.

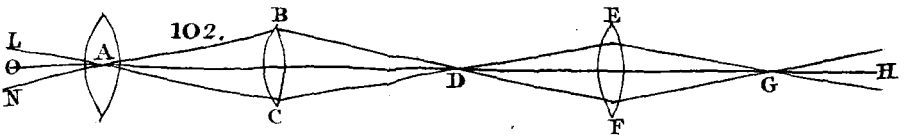

103.

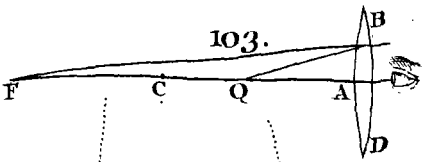

104.

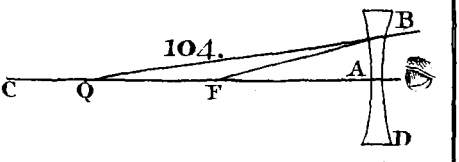

105.

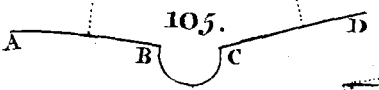

106.

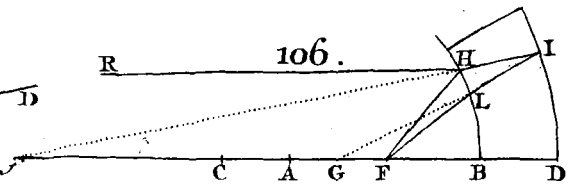

the eye close to CD, and you'll see the object magnified, and erect. Fig. 107.

For since the rays proceeding from the object tend to the focus P; and before they arrive at it, are refracted by the concave CD; therefore they do not cross one another before they come at the eye, and consequently the image is erect. Or thus, since the conjugate focus to P (in the lens CD) is somewhere on the other side of CD, therefore if a line be drawn from Q, the lower part of the image at P (which is there inverted), thro' the middle of the lens CD, it will come to that conjugate focus above the axis, and therefore the image is erect.

The properties of this telescope.

1. The focal distance of AB must be greater than that of CD; or else it will not magnify an object. If AB be less, it will diminish it.

2. The magnifying power is equal to the quotient arising by dividing the focal distance of the object glass, by the focal distance of the eye glass $= \frac{AP}{CP}$.

3. The rays of any pencil coming out of the glass CD to the eye, are nearly parallel. If this does not suit all eyes, the tube GD must be put in, or drawn out a little, till the object appears distinct.

4. The visible area of the object is the greater, the nearer the eye is to the glass; and depends on the breadth of the pupil of the eye, and of the object glass. Therefore the view will be small.

5. In order to see more of the object, the eye must be moved laterally, or up and down, the telescope remaining fixt. By this means one may see successively all the parts, that the telescope can take in at once, and that depends upon the breadth of the eye glass.

6. This

Fig. 107. 6. This ſort of teleſcopes muſt not be made long; for then the viſible area is ſo little, that they become uſeleſs.

For if you ſhut your eye for a while that the pupil may dilate, as it will in the dark; and then ſuddenly opening it, and looking ſteadily at an object thro' the teleſcope, you'll ſee it largeſt at firſt, and afterwards it gradually leſſens, as the pupil contracts by the light. Alſo if you cover the object glaſs with a paper with a hole in it; leſs of the object will appear than before; and ſo much leſs as the hole is leſs. And therefore the viſible area depends both upon the breadth of the pupil, and of the object glaſs.

Alſo if a paper be put over the eye glaſs, having a ſmall hole in it; leſs of the object will appear, by moving to and fro, ſideways; than did before, thro' the whole eye glaſs. And if the hole be leſs than the pupil, the direct view will be leſs.

In a long teleſcope of this ſort, the viſible area will be very ſmall, by the narrowneſs of the object glaſs. And if the object glaſs be made broader, the object will be coloured, and conſequenly confuſed.

This teleſcope is the ſame as is generally called a *common perſpective glaſs*.

PROB. VII.

108. *To make a teleſcope with two convex glaſſes, to ſhew objects inverted; called the* Aſtronomical Teleſcope.

Let A, B be two convex lenſes, HC, DE two tubes ſliding within one another. Fix the lens A with the longer focus, in the wider tube HC; and the lens B with the ſhorter focus, in the ſmaller tube DE; and let the axes of the glaſſes coincide with

with the axis of both tubes. Then sliding the tube DE, within the other, till the distance of the lenses be equal to the sum of their principal focal distances; or that their principal foci may coincide in the same point P; and near P there must be a stop, with a hole to circumscribe the image, and to exclude all straggling rays. Fig. 108.

And then the telescope is fit for using, which is done by directing it streight to the distant object; and then applying the eye beyond B, the distance of its focus; the object will appear magnified and inverted.

For the rays from the object R, crossing at A, will form the image at the focus P, inverted; which viewed thro' the lens D, will therefore appear inverted. And P being the principal focus of B, the emerging rays will fall parallel upon the eye, and cause distinct vision.

The properties of this telescope.

1. The magnifying power is as the ratio of the focal distance of the object glass A, to that of the eye glass B.

2. The rays emerging out of the eye glass to the eye, must be nearly parallel, for a good eye. If this happens not to suit any other eye; then the tube DE must be thrust in or pulled out, till the object appears distinct.

3. The apparent magnitude of the object is the same wherever the eye is placed, by Prop. 37. B. 3. But the visible area is the greatest, when the distance BO of the eye is nearly equal to BP, the focal distance of the eye glass. By Prob. III.

4. The object in this telescope is always inverted; and therefore it is only applied to astronomical uses, to look at the celestial bodies. For it signifies little whether they appear erect or inverted,

Fig. 108. ed, in these cases. And they are commonly used in the night.

5 The visual angle depends on the breadth of the eye glass. For it is equal to the angle which the eye glass subtends at the object glass.

PROB. VIII.

109. *To make a telescope with three convex glasses to shew objects erect.*

Combine the two glasses A, B, so that FA may be the principal focal distance of A; and FB twice the principal focal distance of B, and BP the same; let these be fixt in one tube. Then place the lens C, in another tube sliding within the first, that PC may be its principal focal distance, which may be done by sliding the inner tube back or forward; and then the telescope is finished. The eye must be placed at the distance of 2PC behind C.

For parallel rays proceeding from the object R, and falling on the lens A, are refracted to the focus F, and there give the image inverted. And (Prop. XXI.) F, P are conjugate foci, and (Cor. Prop. XXIII.) they are at the least distance possible. And since the image at F is inverted, that at P will be erect. And since PC is the focal distance of C, the rays falling on it, will emerge parallel, upon the eye; which therefore will see the object erect.

This telescope is of little use, by reason it takes in so little of the object; and makes the visible area so small.

SCHOLIUM.

A telescope may be made with two convex glasses to see objects erect. And that is by combining the two lenses A, B, as before, which will give the image at P erect, which image may be seen

seen by an eye placed six or eight inches behind it. Fig. 109.
This telescope is the same as the former, when the glass C is taken away; but it takes not in so much of the object as the other, and therefore is of no use for telescopes.

A telescope may also be made with two convex lenses, and a concave, which will shew objects inverted. Here the concave is the middlemost, being put instead of B. And they are placed thus, the foci of A and B must not coincide as in Prob. V; but they must be a little further asunder, the focus of B being further from A than its focus is; and so far, that the conjugate focus (of B) may be at P; then if the eye glass C be placed, that its focus may be at P, then looking thro' the telescope the object will appear distinct, and inverted. This telescope, has full as great magnifying power as any refracting telescope; but because the object is inverted, it is not used. The construction of this telescope is the same as the solar telescope in Prob. XIII. following, fig. 114, having a concave eye glass L. For if *i* be its focus, and *h* the focus of AB; and *h*, K conjugate foci of L. Then K is the focus of a convex eye glass for this telescope.

PROB. IX.

To make a telescope with four convex glasses to shew objects erect.

Fix the lens A of a great focal distance in a 110
wide tube, and fix the three small lenses or eye glasses B, C, D in another tube, to slide within the former. The lenses B, C, D, must be all of one focal distance, and must be placed equidistant in the tube, so that BC, and CD, may be twice the focal distance. Then if CP = PD, P will be the principal focus of C and D. A stop must be placed

Fig. 110. placed at P or F, to ſtop the ſtraggling rays. Then ſlide the tube with the three eye glaſſes, within the other, till the foci of A and B coincide in F. Then the teleſcope is made, then directing it to the object R, and placing the eye in the other principal focus of D; and the object will appear to it magnified and erect.

For parallel rays coming from the far diſtant object R, will be refracted by the object glaſs A to its focus F, and there make the image inverted. Then ſince F is the principal focus of B, the rays diverging from the image at F, and falling on the lens B will emerge parallel, and fall parallel on the glaſs C, and therefore will be refracted by it, to its principal focus P, and there form the image erect. Then the rays flowing from P the principal focus of D, will emerge a third time parallel, in falling on the eye; which (by Prob. III.) muſt be placed at the principal focus; and then the eye will diſtinctly ſee the image P of the object R, erect and magnified. Here then the firſt image is at F inverted, and the ſecond at P erect, from whence rays flow to the eye.

If BC be leſs than twice the focal diſtance of B or C, then ſome of the rays will miſs the eye glaſs D. And if BC be greater than twice the focal diſtance, ſome of the rays will miſs the glaſs C. And in either caſe the proſpect will be diminiſhed.

This teleſcope with four glaſſes is in effect two teleſcopes, of two glaſſes each, as in Prob. VII. The firſt teleſcope is AB, where the rays emerge parallel from B. The ſecond is CD, where the rays fall parallel on C, and emerge parallel from D. And ſince C and D are equal, they magnify nothing, and therefore the image at P is equal to the image at F. All that the glaſſes C, and D do, is to invert the image at F, or make the image of

of R erect. This is the common telescope used in the day time to look at distant objects. Fig. 110.

If a stop be placed at P, with a hole to contain the image; it will cut off the rest of the rays which come irregularly, and would disturb the distinctness of the image; and will take away the colours which arise by the different refrangibility of the rays, which would make the image confused. But the image will no more be coloured by four glasses than by two; for the glass C corrects and takes away the colours which the glass B produced.

The properties of this telescope.

1. The magnifying power, is in the proportion of the focal distance of the object glass, to the focal distance of the eye glass. This will be shewn afterwards.

2. It shews the object erect, but not so bright as in the telescope with two convex lenses, because the other two reflect a deal of the light which is lost. In other respects it has the same properties as the other telescope.

3. The visible area depends on the breadth of the eye glass, for as the eye glass is bigger or lesser, the angle it subtends at A is greater or lesser, or its opposite angle, which is the angle the part of the object subtends at A, which determines the visible area. And this telescope takes in more than that in Prop. VI, with a concave eye glass.

4. The brightness of an object seen thro' a given telescope is so much the greater as the aperture of the object glass is greater. For suppose the object glass covered with paper, with a small hole in the middle; the magnitude of the image in the focus will not be altered, nor consequently that upon the retina of the eye. But the hole in the paper being smaller than the object glass, fewer rays of every pencil will come to the focus, and the image will be more faint.

Fig. 110. 5. If the aperture and focal distance of the object glass remains the same; an object appears brighter or fainter, according to the greater or lesser focal distance of the eye glass; that is according to the lesser or greater magnifying power. For the same quantity of light spread over a smaller or greater image, makes it brighter or duller.

6. It is found by experience, that an object glass of 55 feet focal distance will bear an aperture of 4 inches, and an eye glass, whose focal distance is 4.4 inches. And for other object glasses, the apertures thereof, and the focal distances of the eye glasses, must be as the square roots of the focal distances of the object glasses. But to view objects by day light, requires eye glasses whose focal distances are longer; and by night shorter.

SCHOLIUM.

It may be thought, that in a telescope of any length, an object may be magnified in any proportion, by making the focal distances of the object glass and eye glass in that ratio. But there are two causes which prevent this. 1. Whilst the object glass remains the same, the more the object is to be magnified, the more convex the eye glass must be, and then the more obscure and dark the object will appear. 2. By this means the object will be represented the more confusedly; and if one attempts to remedy this by increasing the aperture, the confusion will be more increased, and the objects will at last appear coloured. So that increasing the aperture of the object glass, makes the object appear brighter, but at the same time it is confused and indistinct.

Since the pupil dilates itself very much in the dark, therefore there is not occasion for so much light in looking at the moon or stars.

There

There are telescopes made with five or six or more glasses, which by refracting the rays gradually to a focus, will bear a larger aperture; but then the object is more faint, by the loss of so many rays, by the reflection from so many glasses. Fig. 110.

Sometimes the eye glass D is of a different focus from B and C. But the distance BC must still be the sum of the focal distances of C and D. Thus shorter eye glasses are used in the night, to increase the brightness of the object.

PROB. X.

To find the magnifying power of a telescope.

Let the far distant object appear from A under the angle RAS, or its opposite GAF, drawn thro' the center of the object glass A. And let B be eye glass, FG the image in the focus of the glasses A and B. Then thro' the extremes F, G, of the image, draw the lines FBL, GBN, thro' the center of the lens B, and BL, BN will be the refracted rays (by Prop. XVII. B. III.) Then the object is seen thro' the telescope under the angle LBN or FBG, and it is seen from A or from B under the angle RAS or GAF. Therefore the apparent angle thro' the telescope, is to the apparent angle to the naked eye; as angle GBF, to the angle GAF; that is as AF to BF; that is, as the focal distance of the object glass, is to the focal distance of the eye glass. And if there be four convex glasses; if the glasses B, C, D, are all equal (fig. 110), the image at P is equal to the image at F, and the magnifying power continues the same as before. But if they be different glasses, the image at F will be to the image at P, as the focal distance of B, to the focal distance of D. So that at last, the apparent angle thro' the telescope, will be to the 111. 112.

Fig. apparent angle to the naked eye; as the focal dis-
111. tance of the object glass, to the focal distance of
112. the last eye glass. See also the Corollaries of Prob. II.

Cor. 1. *The magnifying power by a refracting telescope, is equal to the focal distance of the object glass divided by the focal distance of the eye glass.*

111. Cor. 2. *In a telescope with convex glasses; the visual angle or linear view, is as the diameter of the eye glass, divided by the focal distance of the object glass. And the visible area as the square of that quantity.*

This depends upon the breadth of the eye glass, therefore drawing AD to the edge of it, BAD will be half RAS or half the visual angle; and that angle BAD or its double is as $\frac{BD}{BA}$; and the visible area as $\frac{BD^2}{BA^2}$. In the telescope with a concave glass (fig. 112.) it depends on the breadth of the pupil.

Cor. 3. *As the distance between the object glass and eye glass, to the breadth of the eye glass; so is radius, to the tangent of the angle which the telescope takes in.*

For all the telescope can take in, is contained between two lines drawn from the edges of the eye glass, through the center of the object glass. The contained angle is what the telescope can take in.

PROB.

Fig.

PROP. XI.

To find the degree of indistinctness, or confused appearance of an object, seen thro' a telescope.

Since no lens can be made so perfect, as to refract all the rays issuing from one point of an object, to a single point in the picture, but there will always be a deviation or aberration more or less, according as the lens is broader or narrower. And by reason of this aberration, the rays proceeding from one point will be spread over a certain space of the image, and cause that confusion or indistinctness observed in telescopes; which space is the circle of aberration in the focus of the object glass. And this confusion will be so much the greater, as that circle is larger, because there are so many more different points of that space, which represent but one point of the object; and therefore that confusion or indistinctness is, *ceteris paribus*, as the circle of aberration in the focus of the object glass; that is, by (Cor. 5. Prop. XLI. B. III.) as the area of the object glass.

Now the confusion of the image in the bottom of the eye (which is that we seek) is as the apparent magnitude of this circle of aberrations. And the apparent diameter of aberration seen thro' the eye glass, is as the angle made by the extreme rays in falling upon the eye, or (which is equal to it, by Cor. 2. Prop. XVII. B. III.) as the angle subtended by that diameter at the center of the eye glass, that is, as the diameter itself directly, and the focal distance of the eye glass reciprocally. Therefore the apparent magnitude of the circle of aberrations, is as the square of that diameter directly, and the square of the focal distance of the eye glass reciprocally; or as the square of the aper-

Fig. ture of the object glass directly, and the square of the focal distance of the eye glass reciprocally. And therefore the confusion or indistinctness is in that ratio.

Cor. 1. *The indistinctness of an object seen thro' a refracting telescope, is as the square of the aperture of the object glass, divided by the square of the focal distance of the eye glass.*

Cor. 2. *An object appears equally distinct in several refracting telescopes, when the diameters of the apertures of the object glasses, are in a given ratio to the focal distances of the eye glasses.*

PROB. XII.

To find the apparent brightness of an object, seen thro' a refracting telescope.

If the area of the image upon the retina be the same, the brightness will be as the quantity of light upon it, that is, as the area of the aperture of the object glass. And if the aperture or quantity of light be the same, the brightness will be reciprocally as the area of the image, that is, reciprocally as the square of the magnifying power. And therefore in general the brightness is as the area of the object glass directly, and the square of the magnifying power reciprocally.

Otherwise thus.

113. Let two pencils of rays falling on the object glass CD, be refracted to the foci F, *f*; and pass thro' the eye glass B*b*; and be refracted in the directions BL, *b*I. Let BL = FB, then L is the place of the eye, being the place where the several

Fig. 107.

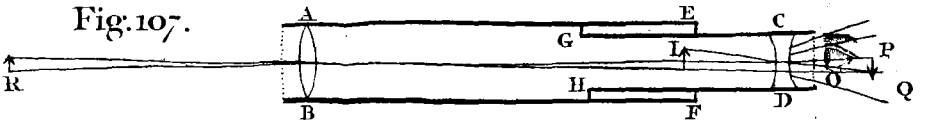

108.

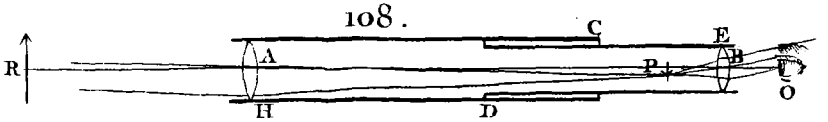

109.

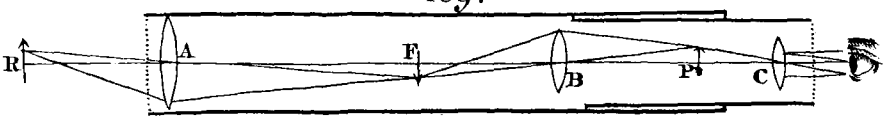

110.

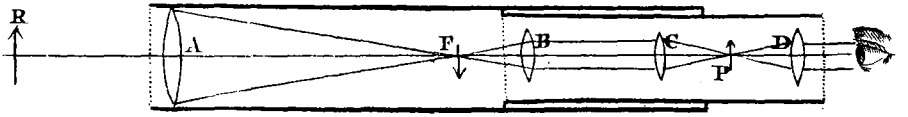

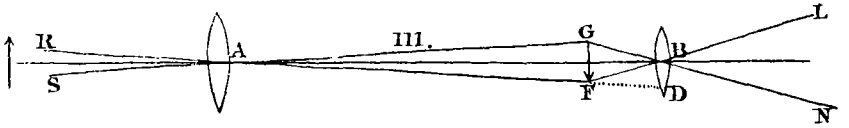

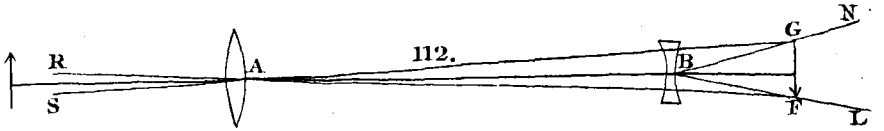

ral pencils (each consisting of parallel rays) converge to, and intersect, after refraction at B*b*. Fig. 113.

Let m = magnifying power, p = diameter of the pupil. Then by similar triangles, AF : FB :: CD : B*b* or LI the breadth of any pencil of rays at B, or at L where the eye is; because beyond B, the rays of each pencil are parallel. Therefore the breadth LI $= \frac{FB \times CD}{AF} = \frac{CD}{m}$.

Let the degree of common light be = 1, the area of the picture in the naked eye = a, then thro' the telescope it will be = mma. Then since the brightness is as the area of the aperture divided by the area of the picture, the brightness of the object by the naked eye will be $\frac{1 \times pp}{a}$; and by the telescope, $\frac{CD^2}{mma}$. Therefore common light : to telescopic light : : $\frac{pp}{a} : \frac{CD^2}{mma} :: 1 : \frac{CD^2}{mmpp}$. And since the common light is 1, the telescopic light will be $\frac{CD^2}{mmpp}$.

Now suppose LI to be just equal to p. Then $pp = \frac{CD^2}{mm}$, and in this case the telescopic light becomes 1, and is therefore equal to common light.

But diminishing CD, LI is also diminished, and therefore in this case, less light enters the pupil; and therefore in all cases where LI is less than p, the brightness $= \frac{CD^2}{mmpp}$.

But if CD be increased never so much, the brightness is not increased at all by the side rays, because they will all miss the pupil. For as CD increases in breadth, B*b* and LI also increase in breadth, and will therefore, in this case, be bigger

Fig. 113. than the pupil. And hence the denſity of the light is the ſame as before. For there is a greater quantity of light on a greater ſpace CD, or on a greater ſpace B*b* or LI; and the quantity of light being as the ſpace, the denſity is not increaſed.

By ſome experiments, I have found $\frac{1}{6}$ part of the light loſt in paſſing thro' two glaſſes; and near $\frac{1}{3}$, in paſſing thro' four, and more ſtill in paſſing thro' five or ſix. This happens by the reflexion of the two ſurfaces of every lens, which reflect a part of the light, that is loſt; and ſo much is the brightneſs decreaſed.

Therefore in general the brightneſs is increaſed, by increaſing the object glaſs, till LI becomes equal to the breadth of the pupil; but no longer.

Cor. 1. *If an object is ſeen thro' a refracting teleſcope, and the rays do not fill the pupil; its apparent brightneſs is as the ſquare of the aperture of the object glaſs, multiplied by the ſquare of the focal diſtance of the eye glaſs, and divided by the ſquare of the focal diſtance of the object glaſs.*

This follows from the firſt method. For the magnifying power is as $\frac{AF}{BF}$; and therefore the brightneſs is as CD^2, divided by $\frac{AF^2}{BF^2}$, or as $\frac{CD^2 \times BF^2}{AF^2}$. Or by the ſecond method, the brightneſs is as $\frac{CD^2}{mmpp}$, *p* being given.

Cor. 2. *According to this; an object appears equally bright, thro' ſeveral teleſcopes, when the apertures are as the magnifying powers.*

Cor. 3. *The ſame thing ſuppoſed; in different teleſcopes, an object will appear equally bright and diſtinct,*

tinct, when the apertures (of the object glasses), and focal distances of the eye glasses, are each of them as the square roots of the focal distances of the object glasses. And then the magnifying powers will also be as the square roots of the focal distances of the object glasses. Fig. 113.

For put F, f for the focal distances of the object glass and eye glass; and that the brightness and distinctness may be in the same ratio, (by Cor. 2. of the last Prop. and Cor. 2. of this), we shall have the aperture $\propto f \propto \frac{F}{f}$, whence $F \propto ff$, and $f \propto \sqrt{F}$, consequently the aperture $\propto \sqrt{F}$. And lastly, the magnifying power $\propto \left(\frac{F}{f} \propto\right) \frac{ff}{f}$ or as f, that is as $\sqrt{F}$.

Cor. 4. *In similar telescopes; the distinctness, visual angle and magnifying power are the same; and the brightness as the square of the length.*

For let D be the diameter of the aperture; F, f the focal distances of the object glass and eye glass; then the distinctness is $\frac{D}{f}$, which is a given ratio. And the magnifying power is $\frac{F}{f}$, which is also a given ratio. And the visual angle is as the diameter of the eye glass divided by F, which is a given ratio. And lastly, the brightness is as $\frac{CD^2}{mm}$ or $\frac{DD}{mm}$, and m or the magnifying power is given; and the aperture CD is as the length of the telescope.

Cor. 5. *Hence, no telescope can shew an object so bright as it is to the naked eye. The nearest it can approach to it is $\frac{5}{6}$ the light for two glasses, and $\frac{2}{3}$ for four glasses.*

For

Fig. 113. For when all the rays enter the eye, the telescopic light, or what passes thro' the telescope into the eye, is $\left(\frac{CD^2}{mmpp} = \right)$ 1, or the same as common light. Of which $\frac{1}{6}$ or $\frac{1}{3}$ is to be deducted for reflected rays, which are lost.

Cor. 6. *According to what has been delivered before (after Prob.* IX. *and in Cor.* 3 *of this), the focal distances and apertures must be made according to the following table.*

foc. obj. glass	aper. obj. glass	foc. eye glass	mag. power	foc. obj. glass	aper. obj. glass	foc. eye glass	mag. power
feet	inch	inch		feet	inch	inch	
1	.54	.60	20	35	3.20	3.52	119
2	.76	.83	28	40	3.41	3.75	128
3	.94	1.03	34	45	3.62	3.98	135
4	1.08	1.19	40	50	3.82	4.20	143
5	1.22	1.34	44	55	4.00	4.40	150
6	1.32	1.45	49	60	4.18	4.60	156
7	1.43	1.57	52	70	4.52	4.97	169
8	1.53	1.68	56	80	4.83	5.31	181
9	1.62	1.78	60	90	5.13	5.64	192
10	1.71	1.88	64	100	5.40	5.94	202
13	1.95	2.14	73	120	5.91	6.50	222
15	2.09	2.30	78	140	6.39	7.03	239
20	2.42	2.66	90	160	6.83	7.51	255
25	2.70	2.97	101	180	7.25	7.97	271
30	2.96	3.25	110	200	7.64	8.40	216

SCHOLIUM.

It follows from Cor. 3, that if a parabola be described, and in the axis thereof, taking the abscissa's equal to the focal distances of the object glasses; then the correspondent ordinates will be proportional

onal to the apertures, or the focal diſtances of the eye glaſſes, or the magnifying powers. For theſe are as the ſquare roots of the abſciſſæ, that is, as the ſquare roots of the focal diſtances of the object glaſſes. And inſtead of the focal diſtances of the object glaſſes, one may ſubſtitute the length of the teleſcope, without ſenſible error. Fig. 113.

In the inveſtigation of the foregoing Problems, the indiſtinctneſs ariſing from the aberrations cauſed by the eye glaſſes are ſet aſide as being inconſiderable. For in ſo ſhort a diſtance as from the eye glaſs to the eye, the heterogeneous rays cannot ſeparate ſo as to become ſenſible, and therefore the errors may be lookt upon as nothing. And the refractions at ſo ſmall a diſtance will be ſufficiently true and regular.

To try the goodneſs of an object glaſs; proceed according to the ſecond method laid down in Prop. XVI. B. III. And if all the holes unite in one, the glaſs is good, otherwiſe not. But there is no better way for trying the goodneſs of an object glaſs than putting it in a tube, and trying it with ſeveral ſmall eye glaſſes, by looking at ſeveral diſtant objects, and particularly at the title page of a book. For that glaſs which repreſents objects the moſt bright and diſtinct, and bears the greateſt aperture, and the ſhorteſt eye glaſs, without colouring or dimneſs, is the beſt glaſs.

If ſeveral teleſcopes of the ſame length be compared together, theſe are the beſt, with which you can read the ſame print, at the greateſt diſtance. And this may be a rule for thoſe that buy teleſcopes, by which they may know how to chuſe the beſt.

There are four principal things in a teleſcope to be conſidered. 1. Magnifying power. 2. Diſtinctneſs. 3. Brightneſs. 4. The viſible angle, or linear view it takes in. And all theſe have been

Fig. been determined in the foregoing Problems, for refracting telescopes.

PROB. XIII.

To make a solar telescope; or to fit up a telescope, for observing eclipses, spots of the sun, &c.

114. This is no more than a common refracting telescope with two glasses, where the eye glass may be either convex or concave. Thro' this telescope the sun's image is projected on a plane surface, or on the opposite wall of a dark room, and magnified. If a telescope be used for this, as it is fitted up for looking at distant objects, the sun's image will be projected at an infinite distance, because the rays emerge parallel out of the eye glass. Therefore to have his image at any given distance, the glasses must he placed after this manner.

Let ABCD be a tube in which is the object glass G, and its focus H. ECDF another tube sliding within the former, in which is the eye glass L, whose focus is I. Let K be the place where the sun's image is to fall, upon the plane MN. Now whether the glass L be convex or concave, it must be placed further from G, than in the common telescope, by the distance HI. And H, K must be the conjugate foci of the glass L, which is done by making HI, HL, HK in continual proportion. Or if L be a concave, *h* the focus of G, *i* the focus of L, then *hi*, *h*L, *h*K must be in continual proportion. Then if the telescope AD be put thro' a hole in the window shut of a dark room, and directed to the sun, you'll have his image at K, upon the plane MN. Or if the plane MN be fixt, then slide the tube CF, back and forward, within the tube FA, till you find the image distinct at K, upon that plane.

For

For if H be the focus of the lens AB, the ſun's image will be at H inverted. And as H, K, are conjugate foci; the image of K or the ſecond image of the ſun will be at K erect. But in the concave lens CD, the firſt image would be at *h*, and the ſecond at K inverted. Fig. 114.

Cor. 1. *To find the diameter of the image* MN; *it will be as* HL : LK : : *as the diameter of the image at* H : *to* MN *the diameter of the image at* K.

For the ſun and the image at H, ſubtend equal angles at the center of the lens G (by Prop. XXXI. of B. III.); and likewiſe the image at H and the image at K, ſubtend equal angles at the lens L; whence the foregoing proportion.

Cor. 2. *The larger the image* MN *is made, the fainter it will be.*

For if it be as big as the object glaſs G, it will be as bright as if the ſun ſhined upon it. And therefore if it be bigger, its brightneſs will be reciprocally as the area.

Cor. 3. *After this manner may be viewed the ſun's face, his ſpots, his eclipſes, the tranſits of the planets, clouds; likewiſe the moon's face, &c. And this teleſcope is uſed by aſtronomers for this purpoſe.*

PROB. XIV.

To fit up a teleſcope for taking ſmall angles, by placing croſs hairs in the focus of the eye glaſs. 115.

Take a braſs plate AB, in which make a round hole, whoſe diameter is ſomething leſs than that of the eye glaſs; this being placed in the focus P of the eye glaſs (fig. 108, 110.), ſerves for a ſtop to cut off the ſuperfluous rays; and in this the hairs are to be fixt, or rather ſeveral pieces of ſmall ſilver wire. In this plate is fixt the ſmall wire *pq*, going thro'

Fig. 115. thro' the center C of the circular hole; and perpendicular to it is fixt the hair *rs*, near the ſide of the hole. There is a ſlider BDE, in which is fixt the hair or wire *tv*, parallel to *rs*, ſo that when the ſlider is thruſt up cloſe to the ſide EB, the hair *tv* may coincide with *rs*; and when it is drawn out to the extent, the hair may be near the other ſide of the hole, at EB. Then the ſpace BF is divided into 10 or 100 parts, which is the utmoſt extent between the hairs *rs* and *tv*. Then the plate ADE muſt be fixt exactly in the plane of the image made at P (fig. 108, 110,) which may eaſily be done after a few trials; for when it is right, the hairs will appear very diſtinctly thro' the eye glaſs, then they muſt be covered with a thin lantern horn. When the place of the plate is had, one may find the focus of the object glaſs by meaſuring from the hairs to the glaſs: and this is the exacteſt way. The plate muſt alſo be placed ſo, that the center C of the hole may be in the axis of the teleſcope. Then we muſt find what arch is repreſented by BF or *no*, the extreme diſtance of the hairs *rs* and *tv*, when the ſlider is drawn out to its uttermoſt.

To find the arch or angle repreſented by no.

Here the croſs hairs muſt be illuminated by a candle, made to ſhine on them. Direct the teleſcope to ſome ſtar, and turn it round, till you find the ſtar moves along the hair *pq*; then the teleſcope is in a right poſition; therefore keeping the ſame ſide uppermoſt; draw out the ſlider to the end of the diviſions, and direct the teleſcope ſo to the ſtar, that it may fall upon the interſection of the croſs hairs at *n*. Then the teleſcope being fixt there, obſerve by a clock or a watch, how long the ſtar is moving from *n* to *o*. Then ſince one degree paſſes thro' any point in four minutes time, or fifteen minutes of the equinoctial in one minute of

of time or sixty seconds. Whence one second of time corresponds to fifteen seconds of measure. Therefore dividing the number of seconds observed by the clock by four, gives the minutes of a degree answering to *no*. But if the star is out of the equinoctial, this number must be lessened in the ratio of radius to the cosine of the star's declination. Fig. 115.

Otherwise.

Set up two marks against a wall at a good distance from you, so that looking thro' the telescope, the two hairs *rs*, *tv*, set to their utmost extent, may just cover the two marks. If they do not, shift the telescope further back or nearer hand; or else shift the marks, till they do. Then measuring the distance of the telescope, as likewise the distance of the two marks from each other, you will find by plane trigonometry the angle included by the visual rays; and that is the angle represented by *no*.

To take an angle with the telescope.

Direct the telescope, so that the fixt hair *rs* may just touch one side or term of the angle to be measured; and draw out the slider EF, till the moveable hair *tv* touches the other side; then mark the division of the scale at B; and knowing before what arch *no* represents: find by the rule of three what angle the number of the scale at B amounts to.

If there be no moveable slider, then the two hairs *rs*, *tv*, must be both fixt. But then in taking an angle, when one side is set to *rs*, the other side will intersect *no* in some point, whose distance from *n*, in respect of *no*, can only be taken by guess, as there will be no scale to measure it by.

But the most exact way of all for taking small angles, is by the *micrometer*, which is an instrument,

Fig. 115. ment, with the croſs hairs like theſe deſcribed; and beſides there is a machine made of clock-work, that by turning the handle, moves the hair *tv* always parallel to itſelf; and by one or two indexes, ſhews the diſtance of the hairs very exactly.

There is another way of fixing the hairs, by placing them diagonally, making half a right angle with one another. And theſe are of uſe for finding the difference of right aſcenſion, or of declination of any two ſtars, which the teleſcope can take in.

Theſe croſs hairs, and micrometers, are only applied to refracting teleſcopes, but have not yet been uſed with reflecting ones, ſince they do not magnify the angle ſo much.

Cor. 1. *Hence the diameters of the planets, may be truly meaſured; and all the particulars of an eclipſe determined; or any ſmall angles accurately taken; and applied to other aſtronomical uſes.*

Cor. 2. *The line* no *ſubtends an angle at the eye, which is greater than the angle it repreſents; in proportion to the magnifying power of the teleſcope.*

For the line *no* being placed with the image, they are both magnified alike.

Cor. 3. *Hence,* no *repreſents the angle which it ſubtends at the center of the object glaſs.*

For it is magnified in the ratio of the focal diſtance of the object glaſs to the focal diſtance of the eye glaſs; that is, as the angle it ſubtends at the eye glaſs, to that it ſubtends at the object glaſs.

PROB.

Fig. 115.

PROB. XV.

To manage telescopes without tubes.

To do this, a long pole must be set upright in the earth, in a wide place, where there is nothing to obstruct the sight. In this pole is made a grove, in which a piece of wood is to be fitted to slide freely up and down, this is to be drawn up by a rope going over a pulley at the top, when it is used. The object glass is put into a short tube AB, and this tube is fixt to a piece of machinery, made to move about two axes CD, lying across one another, and this machinery is fixed to the sliding piece of wood. On the under side of the tube a small rod AF is fixt parallel to it, reaching six or eight inches beyond the tube; to the end of this a string G is tyed, reaching to the ground. Then any person on the ground pulling at the string, can draw the tube into a position parallel to the string, by means of the cross joints; so that the tube will point directly to the person that draws the string.

The eye glass is also put in a short tube H, on the under side of which is also fixt a small rod, at the far end of which I, the low end of the string is to be fixt; and at the nearer end a handle K is fixt to take hold of.

When an observation is to be taken, the sliding piece of wood, with the object glass, is to be drawn up the pole to a proper height, and there fixt. Then drawing the string IG, which is fixt to the tail of the object tube, to set it streight on you; tie the low end of it to the end of the small rod at the eye tube, so as the length of it between the glasses may be of a due length for distinct vision, which in the astronomical telescope, is equal to the sum of the focal distances. Then the string

Fig. 115. drawing the two tubes, ſets them in a right line, and if they alſo be in a right line with the ſtar you want to obſerve, then applying your eye to the tube, you will ſee the ſtar thro' the glaſſes. But if they are not in a line, you muſt alter your poſition, till they are ſo.

It is neceſſary that the obſerver have a reſt to lean on, or to lay the eye tube upon, like a chair back. For without it, the tube cannot be held ſteady. And the obſervations muſt be made in calm fair weather, for the wind will ſhake the tubes, and prevent any thing from being ſeen diſtinctly. And beſides in windy weather, the air is always foul, which makes it unfit to make any obſervations in. And the ſame thing often happens in calm weather, when the air is full of groſs aqueous vapours.

And after this manner perſpectives may be uſed without cloſe tubes; which may be done by holding the eye tube, applied to one end of a long ſtick, with one hand; and the object tube in the other hand, applied to the other end of the ſtick; and ſliding it back and forward on the ſtick to a proper diſtance; which is ſoon found by a few trials. Obſerving to keep the tubes ſtreight on one another, and parallel to the ſtick. After this manner one may uſe the glaſſes of a perſpective as long as ones arm, or longer, by tying the object tube to the ſtick, at a proper diſtance from the nearer end of it; and after this manner, the goodneſs of glaſſes may be tried, without the trouble of putting them into long tubes.

And the ſame way one may make uſe of a long moveable pole, inſtead of one fixt in the ground; which may be uſed for glaſſes not exceeding ſix or eight yards focal diſtance, by tying the eye tube to one end, and the object tube towards the other, at a proper diſtance. And it may be raiſed upon a wall,

a wall, or the ſide of a houſe, by the help of a hay fork, or ſome ſuch thing. Fig. 115.

Sometimes the ſight is diſturbed, by the ſide light coming into the eye tube, which a cloſe tube would have kept out. To prevent which, two ways may be uſed; either to lengthen the tube of the eye glaſs; or to put an umbrella or border round the tube with the object glaſs; and then to take ſight truly at the object, you muſt raiſe your eye above the eye tube, as high as the breadth of the umbrella.

To enlighten the object tube, to take ſight; a lantern may be uſed, tied to the end of a long pole, and ſo raiſed up on high.

PROB. XVI.

To make a reflecting teleſcope.

A reflecting or catadioptric teleſcope may be made ſeveral ways. I ſhall firſt deſcribe the *Gregorian* one, becauſe they are moſt in uſe.

The Gregorian Teleſcope.

ABCD is a tube open at the end AB, FG a concave reflector, having a hole in the middle, and whoſe focus is *n*. *arb* a ſmall concave ſpeculum, whoſe focus is *t*. This is ſo placed, that the focus *n* of the great reflector, and the place of the image *o*, may be conjugate foci, or that *tn*, *tr*, *to* may be continual proportionals. HI is a ſhort braſs tube, ſcrewing into the end of the large one. In this tube is the convex lens E, ſo placed, that EO may be its focal diſtance, and EI the ſame; and at the end I is a ſmall hole for the rays to come thro' to the eye. But I or the place of the eye is found more exactly, by making *ro*, *r*E, *r*I continual proportionals. 117.

Fig. 117. Now the open end AB being ſet directly towards the object, the rays coming from all the points of the object, are parellel; and being reflected by the concave ſpeculum FG, will form the image of that object at *n*, which will be inverted (by Prop. XVIII. B. II.) And for the ſame reaſon, rays flowing from *n*, and reflected by the ſmall concave *ab*, will make the ſecond image at *o*, which is inverted in reſpect of the firſt image, and erect in regard to the object. Laſtly, the rays flowing from the image at *o*, which is the focus of the glaſs E, and being refracted by it, will emerge parallel to the eye; and therefore the object will appear erect thro' the teleſcope. The path of an oblique ray coming from the upper part of the object, is KF*xbsw*I.

To ſuit all ſorts of eyes, there is a ſmall rod ML, with a ſcrew at the end M; this ſcrew goes thro' the arm which is fixt to the ſmall reflector *ab*, ſo that turning the end L it brings it nearer, or ſets it further, from the other reflector FG. It has a ſhoulder N to keep it ſteady.

The two ſpeculums FG, *ab*, are made of a mixture of copper and tin, but any white hard metal will do that will take a good poliſh. But no mixture has been found out yet that will poliſh truly without pores, ſcars, and ſcratches, and dark ſpots in them. And the ſpeculum *ab* muſt be a little bigger than the hole in the middle of the ſpeculum FG.

118. Inſtead of a ſingle eye glaſs, they are now generally made with two; which increaſes the viſible area a little, and prevents the object being coloured at the edges of the aperture. In order to this, the conjugate focus *o*, muſt be taken in the leſſer tube HI, a good diſtance beyond the hole; and then place a lens P near the hole, to make the rays converging to *o*, to converge ſooner, as to *q*; and

and there to form the image. And then place another lens (a meniſcus) at E, ſo that E*q* and E*v* may equal the focal diſtance of it. Then the image which before was at *o*, by the refraction of the lens P, will now be at *q*. Therefore rays flowing from the image at *q*, and refracted by the lens E, will emerge parallel to the eye at *v*. But there is one inconvenience attending two eye glaſſes, that the object will be fainter by ſo many reflexions from their ſurfaces. Fig. 118.

An eye ſtop is to be placed at the laſt image *q*, to circumſcribe the image, and to cut off the ſuperfluous rays, which is a thin baſs plate, with a hole in it, leſs than the reflector *ab*. Alſo a very ſmall hole muſt be made at *v*, to let the rays paſs thro' to the eye, which muſt be no bigger than the breadth of a pencil of rays at *v*.

Since *ro*, *r*E, *r*I are continual proportionals, I will be the focus of rays flowing from *r*; whence the image of the reflector *ab* will be painted diſtinct at I; and therefore a hole is to made in the plate at I, juſt the bigneſs of that image, for the rays to paſs thro' to the eye. If that hole be any bigger than the picture, the light coming by the ſide of the reflector *ab*, will go thro' the hole, and make the picture confuſed. And if the hole be leſs than the picture, rays from the extremities of *ab* will not paſs thro', and ſo the whole cannot be repreſented. Therefore to find exactly the diameter of the eye hole; it will be (by Prop. XVI. B. III), as *r*E : *ab* : : EI : breadth of the image at I, or the diameter of the hole required. 117.

If you hold a thin paper at I, inſtead of the plate, the image of *ab* will be painted on it, and will be viſible thro' the paper, being a black ſpot very diſtinct, ſurrounded with light; and thus one may find the bigneſs of the hole experimentally. And the like for two eye glaſſes.

Fig. 117. To see objects that are near hand distinctly; or for long-sighted people, to see far distant objects; the little concave *ab*, must be moved a little from the large one; but a little nearer for short-sighted people. And all this is done by turning the end L of the rod LM. For if an object comes nearer, its image at *n* will come nearer *t*; and as *tn* grows less, *to* will grow greater; and *o* will come nearer the lens E. Therefore to reduce it back, the glass *ab* is to be set further off. But for short-sighted people, the focus *o* must be set nearer E, to make the rays diverge more; that is, *to* must be longer, and consequently *tn* shorter, or *ab* brought nearer FG. And the contrary for long-sighted people. Therefore for far distant objects, and short-sighted people, screw right about. And unscrew for near objects, and for old men.

The properties of this telescope.

1. It shews the objects erect; but not so bright as in a refracting telescope; because metal reflects less light than glass transmits. For by observation, it appears that all reflecting metals lose more than a third part of the rays.

2. The visible area of an object is as the breadth of the eye glass. For (fig. 117.) if the image at *o*, and the eye glass E be increased, the image at *n* will also be increased, because the angles of incidence and reflexion at *ab* are equal; and consequently the visible part of the object is increased.

3. The brightness of an object is greater when the aperture is greater. For then more light comes to the eye.

118. 4. The brightness of the image is less towards the extreme parts; because the shadow of the small speculum falls on the outside; but on the middle it only covers the hole. And this diminution is greater in long telescopes.

5. It

5. It is found by experience, that a concave reflector, whose focal distance is 9.6 inches, will bear an aperture of 2.3 inches; and requires a small speculum, whose focal distance is 1.5 inches, and breadth 0.6 inches; and two eye glasses, whose focal distances are 3.8 and 1.1 inches. Whence the other requisites are, the breadth of the hole = 0.5 inches; distance of the little speculum and the greater eye glass = 14.2 inches; distance of the eye glasses 2.4 inches. The magnifying power of this is 60. Fig. 118.

6. A telescope of this sort is, far shorter than a dioptric telescope that has the same magnifying power. For one of these reflectors 16 inches long, is found to magnify as much as a dioptric one of 15 or 16 feet long.

Mr. Cassegrain's *telescope.*

ABCD is a tube open at the end AB; FG a concave speculum whose focus is *n*, and in the middle of it, is a round hole for the reflected rays to pass thro'; *arb* a small convex speculum whose focus is *t*; this is placed between *n* and FG, so that the focus *n* of the great concave, and the place of the image *o*, may be conjugate foci, or that *tn*, *tr*, *to*, may be continual proportionals. HI is a short brass tube, screwing into the end of the larger, having a convex lens E in it, so placed, that E*o*, EI may be each equal to its focal distance. At I is a small hole for the rays to come thro' to the eye, which is something less than in Gregory's. 119.

Now when the open end is set towards the object, parallel rays coming from the object are reflected by the great concave FG, to the focus *n*, and there would make the image of it inverted (by Prop. XVIII. B. II.); but before they come at *n*, they are reflected by the little convex *ab*,

Fig. 119. to the conjugate focus *o*, which being on the other side of the reflector, will (by the same Prop.) make there the second image, erect in respect of that at *n*, but inverted in respect of the object. Then *o* being the focus of the lens E, the rays flowing from *o*, and being refracted at E, will emerge parallel to the eye at I; where the object will appear inverted; but may be made erect, by causing the focus *o* to fall without the tube HI, and applying a concave lens, as in Galileo's telescope.

To move the small convex back and forward to suit all eyes and objects, there is the same contrivance as in the Gregorian telescope, by the rod LK. And instead of one eye glass two may be used, which must be placed as in the Gregorian. At *o* an eye stop is to be placed as usual, to keep off straggling rays.

The tract of a ray RG coming from the upper part of the object, will be RG*aswl*; where the part G*a* tends to *x*.

The properties of this telescope.

1. It shews the object inverted; and therefore is more proper for the night, where the inversion of the objects is not regarded.

2. It is shorter than Gregory's telescope, by twice the focal distance of the lesser speculum; and has the same magnifying power, or rather more, and shews the object as bright.

3. The visible area is as the breadth of the eye glass. For increasing the eye glass, more rays will come from the outsides of the object.

4. The greater the aperture is, the brighter the object will appear. For then more light is brought to the same parts of the retina. This will also appear by straitening the aperture, by putting a paper before it, with a hole in it.

5. The brightness of the object is something less towards the extreme parts, occasioned by the shadow of the small speculum.

The

Fig.

The Newtonian telescope.

ABCD is a tube open at the end AB; FG a concave reflector, whose focus is *n*. *arb* a plain metal reflector, set to an angle of 45 degrees with the axis *rz* of the concave. Or instead of metal, you may have a glass prism *abm*, the side *bm* being parallel, and *am* perpendicular to the axis *rz*, and *am* equal to *bm*, and the side *ab* must not be quick-silvered over; for it will reflect all the light without it. And whether this reflector be metal or glass, it must be an oval, whose length *ab* must be to its breadth, as $\sqrt{2}$ to 1; because it stands obliquely. This reflector is cemented to an arm L, which is fixed in the side of the tube, so that the axis of the speculum may pass thro' the middle of *ab*. Let *ro* be made equal to *rn*. And let *o* be the focus of the glass lens *e*, placed in the side of the tube; and a thin plate laid over the glass, with a small hole in it; or rather a small tube going from thence, of the length of *eo*, or rather more, as EI; at the end of which I is a small hole for the rays to pass thro' to the eye. The reflector *ab* must not be made too great, and the reflector FG may either be made of metal, or of glass, according to Prob. V. 120.

The tube AD being turned with its open end AB towards the object; parallel rays coming from all the points of it, will be reflected from the concave FG to the focus *n*, where would be made the image of it inverted. But by the interposition of the small reflector *ab*, they are hindered from coming to *n*, and are reflected thereby to the focus *o*, where they form the second image equal to that at *n*. Lastly, rays proceeding from this image, which is also in the focus of the lens *e*, will be refracted by the lens, and emerge parallel to the eye placed at I. Therefore if the face be set towards the

Fig. 120. the open end AB, and the eye applied at I, the object will appear inverted. Or if you set your face towards the other end CD, it will appear erect to the eye at I; but it is troublesome to stoop down, except the telescope be nearly in a horizontal position.

The image may be made erect, by making the sides *am* and *bm* of the glass prism not plain but convex, that the rays may cross, as well before they come at it, as afterwards between it and the eye glass. Or it may be erected, by projecting the focus *o*, without the tube, and applying a concave at *e*, of a proper focus.

The tract of an oblique ray RZ coming from the upper part of the object, is RZ*aswl*, where the part Z*a* tends to *x*, but is reflected in direction *as* by the plane *ab*.

The inside of this tube, and indeed of all telescopes, must be made very black, to absorb the rays of light that fall upon them.

All these sorts of reflecting telescopes are set upon a stand with three feet; and are moveable in it every way, so that they may be directed to any object; which done, they are fixt there with a screw, which keeps them steady in that position.

In such of these telescopes as magnify much, there is a small telescope fixt to the tube, by the help of which, any object may be found out, by directing it to the same object.

The properties of this telescope.

1. It will bear a greater aperture and eye glass than either of the others; and consequently will magnify more by about a fifth part. It has likewise other advantages, for less light will be lost by reflexion from the oval plane, than from a spherical reflector. And will also reflect the light more truly. In the other telescopes, the distance of the eye

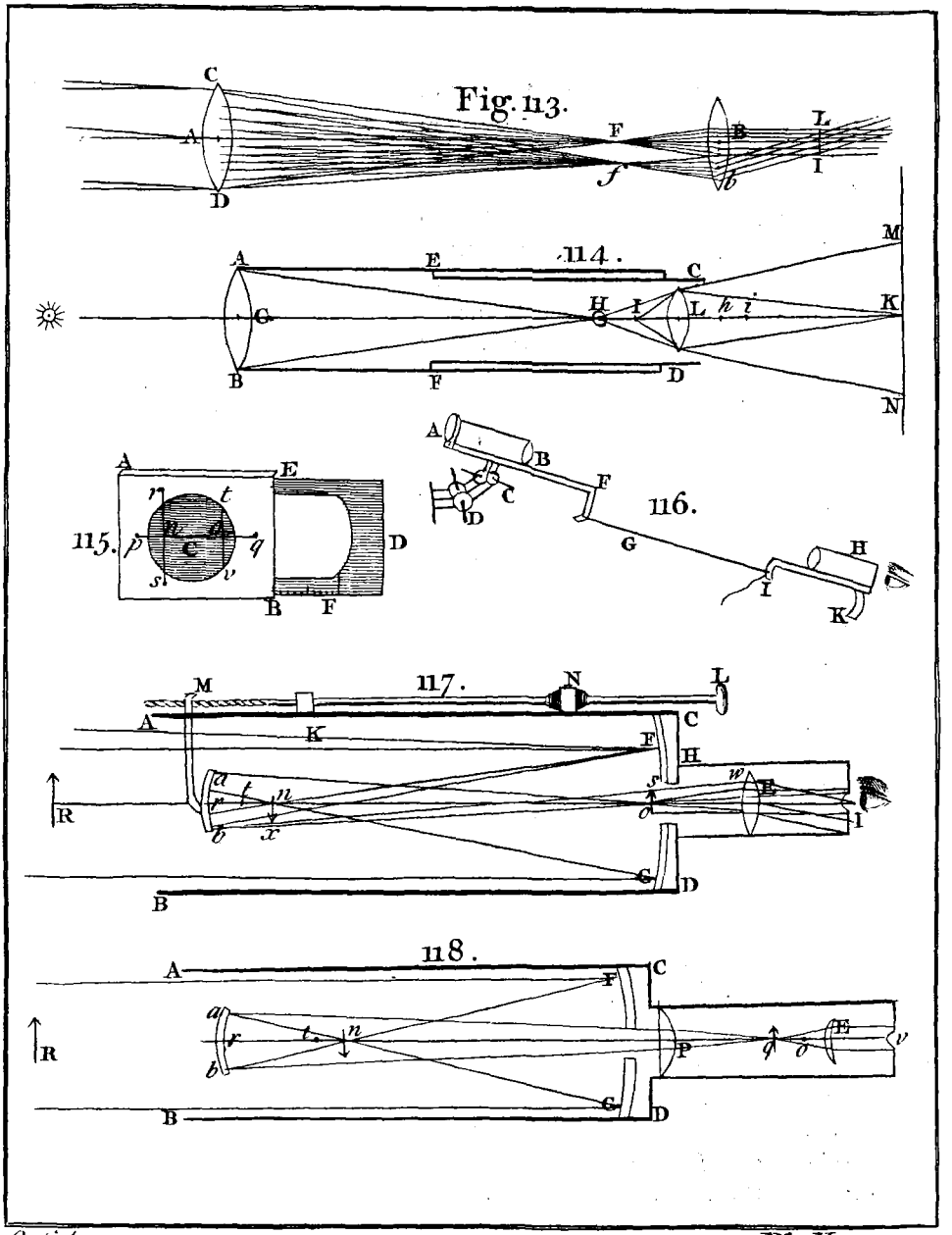
Fig. 113.
114.
115.
116.
117.
118.

eye glaſs and little reflector is greater, which augments the errors of refraction. The errors of the object metal will be more augmented by reflexion from the ſmall convex, which therefore requires a more exact figure; and hence it will not bear ſo large an aperture; alſo being convex it magnifies too much, and therefore will repreſent the objects obſcure, dark, and confuſed. Fig. 120.

2. The object in this teleſcope appears inverted, and therefore is fitter for the night: beſides, it appears in a quite different place, which is not ſo natural, as when it is ſeen in its true place, by looking towards it thro' the teleſcope. And this makes it hard to find.

3. The viſible area is greater, the broader the eye glaſs is. And the object is brighter, the larger the aperture is.

4. This and other ſorts of reflecting teleſcopes, are ſhorter than dioptric ones of the ſame magnifying power. Becauſe the images made by refraction, are confuſed and imperfect, by reaſon of the different refrangibility of the rays, which has no effect in reflections. And conſequently theſe images will not bear to be ſo much magnified by refractors.

5. There is more care required in giving a true figure to a reflecting ſurface than to a refracting one. For an error in the figure of a reflector will produce almoſt ſix times as great an irregularity in the image, as it will do by the refractor.

PROB. XVII.

To find the magnifying power of a reflecting teleſcope; alſo the indiſtinctneſs and brightneſs, and viſual angle.

Let rV be the axis of the teleſcope, and let an object appear to the naked eye under the angle 121.

RVr

Fig. 121. RVr or RVn, n being the focus of FG; and let nx be the first image made by reflexion from FG; and os the second image made by reflexion from ab. Then drawing sE to the center of the eye glass, the angle sEo (by Prop. XVII. B. III.) is the angle which the object appears under thro' the telescope; and therefore it is magnified in the ratio of Rvr to oEs. But the angles of incidence and reflection being equal, we have RVr = nVx, and nrx = ors.

Now the ratio of RVr or nVx to oEs, is compounded of (RVr or) nVx to nrx, and of (nrx or) ors to oEs; that is, of rn to nV, and oE to or; or of $rn \times o$E to nV $\times$ or. And therefore the magnifying power is $\frac{nV \times or}{rn \times oE}$. But since t is the focus of ab, and (by construction of the telescope) $tn : tr :: tr : to$, therefore $nr : tr :: or : to$, and $\frac{or}{rn} = \frac{to}{tr}$, and therefore the magnifying power is $\frac{nV \times to}{oE \times tr}$. This is in the Gregorian and Cassegrain's telescopes. But in the Newtonian one, where the images nx and os are equal, tr and to have nothing to do; and its magnifying power is $\frac{nV}{oE}$ or (fig. 120) $\frac{nZ}{oE}$.

For the indistinctness.

The confusion or indistinctness of the image in the focus of the reflector, is as the circle of aberration; and (by Cor. 1. Prop. XXIV. B. II.) the diameter of the circle of aberration is as $\frac{B^3}{4RR}$, that is, as the cube of the aperture directly, and the square of the focal distance inversly. And the apparent

apparent magnitude of that diameter seen thro' the eye glass, is as the diameter itself directly, and the focal distance of the eye glass inversly. And the indistinctness in the eye is as the apparent area of that circle, that is as the 6th power of the aperture directly, and the 4th power of the focal distance of the great reflector inversly, and also as the square of the focal distance of the eye glass inversly. Therefore if A be the aperture, and F the focal distance of the large reflector, g the focal distance of the eye glass; then the indistinctness is as $\frac{A^6}{F^4gg}$. Fig. 121.

For the brightness.

If the area of the image in the eye be given, the brightness will be as the quantity of light, that is as the square of the aperture. And if the light, or the aperture be given, the brightness will be as the area inversly. Therefore in general the brightness is as the square of the aperture directly, and the area inversly, but the area is as the square of the magnifying power; therefore the brightness is as the square of the aperture directly, and the square of the magnifying power reciprocally. Therefore if M be the magnifying power, the brightness is as $\frac{A^2}{M^2}$.

Cor. 1. *If* F, f, *be the focal distances of the great and small reflector*; g = *focal distance of the eye glass, to* = d. *Then in the Gregorian and Cassagrain's telescope, the magnifying power is* $\frac{Fd}{fg}$. *And in the Newtonian, it is* $\frac{F}{g}$.

Cor. 2. *An object appears equally distinct in reflecting telescopes of the same sort; when the focal distances of*

Fig. 121. *of the eye glasses, are as the cubes of the apertures of the great reflectors, divided by the squares of their focal distances.*

For if $\frac{A^6}{F^4g^2}$ be given; A^6 is as F^4g^2, and A^3 as F^2g, whence g is as $\frac{A^3}{F^2}$.

Cor. 3. *In reflecting telescopes of the same sort; an object appears equally bright, when the aperture is as the magnifying power.*

For if $\frac{A^2}{M^2}$ be a given quantity, then A^2 is as M^2, and A is as M.

Cor. 4. *In several reflecting telescopes of the same sort, an object will appear equally bright and distinct; when their apertures and magnifying powers are each as the fourth roots of the cubes of the focal distances of the great concaves; and the focal distances of the eye glasses as the fourth roots of these focal distances.*

For in the Newtonian telescope M is as $\frac{F}{g}$; and since A is as M or $\frac{F}{g}$, therefore Ag is as F, and g as $\frac{F}{A}$, but g is also as $\frac{A^3}{F^2}$; therefore $\frac{F}{A}$ is as $\frac{A^3}{F^2}$, and F^3 as A^4, and A as $\sqrt[4]{F^3}$; and therefore M is as $\sqrt[4]{F^3}$. Whence g is as $\frac{F}{\sqrt[4]{F^3}}$ or as $\sqrt[4]{F}$.

And in the Gregorian and Cassegrain's telescopes, we have M as $\frac{Fd}{fg}$, wherein if we suppose $\frac{d}{f}$ or (which is the same thing) $\frac{tr}{tn}$ a given ratio, which suits them very well; then M will be as $\frac{F}{g}$, and

all

all things will follow as before in the Newtonian telescope. Fig. 121.

Cor. 5. *In reflecting telescopes the visual angle is as the breadth of the eye glass, divided by its distance from the small reflector.*

For the angle of reflection at r being equal to the angle of incidence, the ray rs will miss the lens E, if it is not broad enough. Therefore diminishing the lens, diminishes the angle srV and Vrx; and also rVx, and rVR the visual angle; and $< sro$ is as $\frac{so}{or}$ = breadth of the eye glass, divided by Er.

Cor. 6. *If* N *be the angle, which the eye glass subtends at the little reflector. Then* $\frac{Nf}{F}$ *is the angle the telescope takes in, nearly; supposing the hole as big as the eye glass. But in Newton's, the angle taken in, is that which the eye glass (placed in the focus) subtends at the great concave.*

For supposing the ray rs to touch the edge of the eye glass, then the angle $N = ors$ or xrn, is to be diminished in the ratio of rn to nV to get the angle nVx or RVn, that is nearly in the ratio of rt to nV, or f to F. And in Newton's, nx subtends the angle $nZx = RZn$ (fig. 120.) The angle N is the linear view; and that diminished in the ratio of f to F nearly, is the real angle, the part seen of the object, appears under, to the naked eye.

Cor. 7. *In similar reflecting telescopes, the magnifying power, distinctness and visual angle, are the same. And the brightness as the square of the length of the telescope.*

For F, f, g, are in given ratios to one another; and the magnifying power is as $\frac{Fd}{fg}$ or $\frac{F}{g}$, which is

Fig. 121. is a given ratio. And the diſtinctneſs (or its ſquare root) is as $\frac{A^3}{F^2 g}$, and this is a given ratio. Alſo the viſual angle is as $\frac{b}{F+f}$ or as $\frac{b}{F}$ (putting b = breadth of the eye glaſs), which is alſo a given ratio. And laſtly, the brightneſt is as $\frac{A^2}{M^2}$ or as A^2 (becauſe M is given) that is, as F^2.

Cor. 8. *From what has been laid down concerning the nature and conſtruction of theſe teleſcopes, it will not be difficult to conſtruct one of any length. I ſhall here inſert ſome tables conſtructed by the preceding rules.*

The Gregorian Teleſcope.

F		f	A	a	g	M
f.	in.	inches	inches	inches	inches	
0	6	1.14	1.61	0.32	1.25	25
0	9	1.46	2.23	0.38	1.53	36
1	0	1.76	2.70	0.42	1.73	47
1	6	2.32	3.62	0.51	2.04	68
2	0	2.67	4 52	0.56	2.31	93
3	0	3.43	6.26	0.65	2.56	148

Mr. Caſſegrain's.

F		f	A	a	g	M
f.	in.	inches	inches	inches	inches	
1	6	2.17	3.89	0.42	1.67	90
3	0	3.57	6.57	0.59	2.34	155
5	0	5 17	9.61	0.76	3.03	230

Sir

Fig. 121.

Sir J. Newton's.

F	A	g	M
feet	inches	inches	
½	0.86	0.16	36
1	1.44	0.20	60
2	2.45	0.23	102
3	3.31	0.26	138
4	4.10	0.28	171
5	4.85	0.29	202
6	5.57	0.31	232
8	6.89	0.33	287
10	8.16	0.35	340
12	9.36	0.36	390

SCHOLIUM I.

The breadth of the speculum *ab* is not determined by the foregoing calculations, and therefore is left to the judgment of the artist. But it must be considered, that if it is too broad, it will intercept too many of the best rays, from coming to the large concave FG; and if it be two small, many of the rays reflected from FG, will pass by it. Therefore to avoid both inconveniences, it will be proper to make its breadth to that of FG, as their focal distances, or rather as *rn* to V*n*. For then it will just reflect the whole pencil of direct rays that falls upon FG, (see fig. 118.)

Likewise $\frac{d}{f}$ was assumed a given ratio; but as it is unlimited, it may be taken otherwise; and then this will cause a variation in all the other quantities, and their proportions to one another. And of this experience will be the best guide.

In the tables before laid down, it is supposed that the focus *o* falls at or about V, and on that

Fig. 121. ſuppoſition the magnifying powers are calculated; which would be greater if *o* falls beyond it.

Inſtead of a ſmall concave or convex reflector *ab*, a plane reflector may be uſed. But then to have the focus *o* to fall at V, it muſt be placed in the middle of *n*V; and then its breadth muſt be half of FG, or elſe it cannot reflect all the direct rays falling on FG, and reflected by it. Such a plane reflector would ſtop a quarter of the direct pencil of rays, and the beſt of them too. And beſides, the image at *o* would be no bigger than that at *n*; and therefore this conſtruction will not anſwer the end.

Very long teleſcopes ſhould not be uſed to magnify terreſtrial objects. For they equally magnify the particles of the atmoſphere, and all groſs vapours ariſing in it. And thro' ſuch teleſcopes the air appears in a perpetual tremor; and the more ſo, the more the teleſcope magnifies. And this trembling motion of the atmoſphere makes every object appear confuſed and indiſtinct. The only remedy is a ſerene and quiet air.

If it was not for the different refrangibility of the rays, the errors in refracting teleſcopes, would only be ſuch as are cauſed by the ſphericalneſs of the figure of the glaſſes; and then the dimenſions of the ſeveral parts would be proportioned by the ſame rules, as in reflecting teleſcopes. But as experience ſhews the contrary, it is plain, that the aberration ariſing from the ſpherical figure, is extremely ſmall, in compariſon of that proceeding from the different refrangibility.

I ſhall here add the algebraic expreſſions for the ſeveral parts of Gregory's teleſcope, ſuch as have been found to anſwer experience.

Let focal diſtance of the great concave				= F.
its breadth	—	—	—	= A.
magnifying power		—	—	= M.

tan.

tan. angle the hole in the concave subtends at the eye glass $\Big\} = n.$ Fig. 121.

$$\frac{nF}{M} = c, \sqrt{Ac + cc} = R.$$

then, c = breadth of the image at n, of so much of the object as the eye takes in; supposing the eye glass as big as the hole.

Breadth of the hole in the concave, or of the small speculum (a) $\Big\} = c + R.$

focal distance of the small speculum $(f) = \frac{F \times \overline{c+R}}{A + \overline{c+2R}}.$

distance of the speculums $(Vr) = F + \frac{F\sqrt{c}}{\sqrt{A+c}} = l.$

focal distance of the eye glass $(g = Eo) = \frac{c+R}{n}.$

distance of the eye (EI) $= \frac{l+g}{l} g = h.$

breadth of the hole in the plate at the eye $= \frac{h \times \overline{c+R}}{l+g}.$

Note, day telescopes require an eye glass of twice the focus of night telescopes; and magnifies but half as much.

Scholium II.

Besides the telescopes described before; there is also one called a *binocular or double telescope.* This is no more than two equal telescopes set in a frame, parallel to one another; and these may be set at a proper distance from one another, by the help of screws; and that distance is to be the same, as the distance of the two pupils of the eyes. When that is adjusted, a person is to look thro' them both at once; thro' one with each eye, to any object; which will then be seen by both eyes, and appear far brighter than thro' a single telescope.

Fig. All telescopes in general represent all terrestrial objects to be nearer hand, but not larger; and this nearness, vicinity or seeming approach of the object, is as the magnifying power of the telescope. Thus looking at a man 100 yards off, with a telescope that magnifies 100 times; the man will appear no bigger, but will seem only to be a yard off; and the like of other objects situated on the earth.

PROB. XVIII.

To find the magnifying power of a telescope, by experiment.

Make two equal circles of paper of an inch diameter or more, and fix one of them upon a wall 100 or 200 yards distant; and the other at a small distance, in a line with the first. Then look at the further circle thro' the telescope with one eye, and at the near circle with the other eye naked. Move the nearer circle (or else the telescope) back and forward, till the two circles appear equal, or coincide. Then measure the two distances, from the eye glass of the telescope to the two cirles; then divide the greater distance by the lesser, and you have the magnifying power of the telescope.

Or thus,

If you be in a room where there is a casement or sash window; cause a staff, or such a thing of two or three feet long, to be set upright at a good distance from the house. Open the window, and place yourself at a convenient distance therefrom, so that you may be in a line with the staff, and the side or frame of the window. Then looking thro' the telescope with one eye, to the staff, mark the extremities of the staff where they appear on the window frame. Also with the other eye naked, (or

(or with the ſame eye afterwards, placed where the eye glaſs of the teleſcope was) look at the ſtaff, and mark the extremities of it alſo on the window frame. Meaſure how oft this laſt diſtance is contained in the firſt, and that is the magnifying power. Fig.

Inſtead of a ſtaff, an accidental object may preſent itſelf, which will do as well; as a chimney top, a window or door of a houſe, a tree, &c. By trying thus ſeveral times to find if your marks be rightly ſet, you may do the thing pretty exactly.

In a refracting teleſcope, when you have a large object to look at, you may do the ſame thing, by looking the contrary way thro' the teleſcope to diminiſh it; and making marks as before; and likewiſe looking with the naked eye, and making marks likewiſe; for theſe will give the ſame reſult. Inſtead of marks, you may ſtick pins into the window frame.

PROB. XIX.

To make a ſingle microſcope.

A *microſcope* is an optical inſtrument, made of one or more glaſſes, or ſometimes with a reflecting metal; to view very ſmall objects. 122.

To make a ſingle one, take a very ſmall lens L, fix it in a frame to take hold on with the fingers; and place any ſmall object PR in the focus of it; and applying the eye cloſe to it on the other ſide, at O, and looking thro' the lens; and it will view the object diſtinctly and magnified. Or if the focus is not known, move the object to and fro', till it appears moſt diſtinctly; and then it is in the focus; and therefore the rays will be refracted parallel to the eye.

In this microſcope, put D = the leaſt diſtance, that the naked eye can ſee diſtinctly; then the mag-

Fig. 122. nifying power of the microscope is $\frac{D}{QL}$. And it is seen direct.

For the rays from P and R enter the eye under the angle PLR, but to the naked eye the object appears under the angle which PR subtends at the distance D. And these angles are reciprocally as the distances D and QL. And therefore the apparent magnitudes are in that ratio.

If the lens L was taken away, and a plate with a small hole in it put in its place; the object PR will appear under the same angle PLR as before.

Otherwise thus.

123. Since lenses cannot be formed small enough to view very minute objects; there is a necessity of making use of very small spheres for that purpose. Let ABD be a small sphere, C its center, PQR an object, placed in the focus Q, where $AQ = \frac{1}{2}AC$. Then applying the eye close behind the sphere, it will see the object magnified. For the rays flowing from the focus Q, and falling on the sphere, will emerge parallel to the eye, and the object will appear distinct, and erect.

If D be the least distance that the naked eye can see distinctly; then the magnifying power will be $\frac{D}{CQ}$.

For drawing PCG, RCF thro' the center C, the rays from P and R come to the eye under the angle FCG or PCR. And that angle is to the angle which the object appears under at the distance D, as that distance D to CQ; and therefore that is the ratio of the magnifying power.

Whence this sphere has the same magnifying power as a lens whose focal distance is CQ. But these spheres are inferior to lenses; because in the lens

lens the object is three times as far distant from it, as it is from the sphere; for which reason the sphere hides almost all the light from the object. Fig. 123.

These spheres are fixt between two brass plates, or rather one plate doubled in the middle; and having a small hole drilled through it, to take up about thirty degrees of the sphere; and in this hole the sphere is lodged.

Otherwise thus.

AB is a tube, having a small lens or sphere fixt in the end A, and the end B must be covered with a very thin paper. P is the object, which must be placed a little further off than the focus; so that the other focus (conjugate to P) may fall just on the paper at B; which is easily known by moving P back and forward, till the image at B be distinct, where it will appear magnified, in the ratio of the length of the tube to the focal distance of the glass sphere or lens, and inverted. The object P ought to be illuminated. 124.

A microscope may be made, by placing two plano convex glasses in a frame, to touch at their convex surfaces. This will shew the objects flat and not crooked.

Cor. 1. *In single microscopes, the object will be equally distinct, when the apertures are as the focal distances.*

For then they are similar parts of the whole spheres, and consequently there is the same separation of the rays in both, upon which the indistinctness depends.

Cor. 2. *The magnifying power of a single lens is reciprocally as the focal distance; or it is* $\frac{D}{QL}$.

For D the distance to see distinctly, is given.

Fig. 122. Cor. 3. *An object would appear as great to the naked eye as thro' a single microscope, if it was placed at the focal distance from the eye, and the eye could see distinctly at that distance.*

For then $D = QL$, and the magnifying power $\frac{D}{QL}$ is 1; and it would appear under the same angle to the naked eye as thro' the microscope.

Cor. 4. *The brightness of an object seen through a single microscope is as the square of the aperture, divided by the square of the focal distance.*

For the focal distance and aperture being supposed in a given ratio, the angle which the glass subtends at the focus is given, and consequently the quantity of light contained in that angle (or in a cone described by its revolution) will be given. But when a given quantity of light enters the eye, the brightness of the image will be reciprocally as its bigness, that is reciprocally as the square of the magnifying power, or reciprocally as the square of the focal distance. Now increase the aperture, and the light will be increased in the ratio of the square of the diameter of the aperture.

Cor. 5. *The more convex the lens is, the greater is the image; but then it is also the more obscure. And therefore we cannot magnify as far as we please, unless more light be borrowed to illuminate the object; and that would fail at last.*

For the power of the microscope would be limited by the breadth of the pencils, that enter the pupil, and these are equal to the breadth of the aperture; and if that be less than $\frac{1}{5}$ or $\frac{1}{6}$ of a line; the edges of the object will begin to appear indistinct. And to preserve the same distinctness, the aperture cannot be increased, but must be in a given ratio to the focal distance.

SCHO-

Fig.

SCHOLIUM.

There is a way to make water microſcopes, which is thus; take a thin braſs plate, and dril a hole in it, about the 30th part of an inch. Then take a little water upon the point of a needle or pin, and fill the hole with it, and this water will form a double convex lens or ſphere. Then a ſmall object being placed upon a thin glaſs, fixed in the other end of the braſs turned up, and drawn into the focus by a ſcrew. Then the object will appear magnify'd thro' the drop of water, more or leſs according to the ſmallneſs of the hole. But this ſphere of water will exhale, and vaniſh away in a little time. 124.

If an object be illuminated by ſome homogeneal colour in a dark room, the microſcope will bear a deeper charge and a larger aperture, with diſtinctneſs.

To make the little glaſs ſpheres for microſcopes. Take ſome ſmall pieces of broken glaſs, and hold them in the blue flame of a candle, till they be red hot, and run into globes, or rather in a lamp made with rectified ſpirit of wine, with a wick made of ſilver wire laid cloſe together. Any ſmall piece of glaſs taken upon the end of a ſilver needle wetted with ſpittle, and this held in the flame till it is melted, and becomes round, then it muſt be immediately taken out and cooled. Or take a clear piece of glaſs and heat it in the lamp, and draw it out into a long thread; then holding the end of the thread in the flame, till it run into a round globule hanging at the end of the thread; it muſt then be taken out. Theſe will magnify vaſtly if they are as big as a grain of muſtard ſeed, or of a ſmall pin head. The chief uſe of theſe globules, is to look at tranſparent particles of matter;

Fig. ter; and the leaſt globules have the greateſt power of magnifying.

Drops of liquors which are to be viewed, muſt be ſpread upon a thin glaſs, contrived to ſlide every way, that all the parts of it may be brought ſucceſſively to the focus.

By help of theſe inſtruments one may ſee the circulation of the blood in animals; the animalcula that ſwim in drops of water impregnated with ginger, pepper, and ſuch like things; alſo in vinegar. Their forms are various, and their motion odd and ſurpriſing; theſe in vinegar are like eels, and ſwim like them; and generate their own kind. It is likely theſe animals are drawn out of the air by the ſmell of the infuſion in which they are found. For none appears in a veſſel that is cloſe covered. Milk appears to conſiſt of tranſparent globules, ſwimming in a tranſparent liquor, but of a different degree of refraction. The animalcula that ſwim in water are of a globular form, but tranſparent; they have two motions, one progreſſive, and the other a rotary one; they are exceedingly ſmall, 30,000 of them being but equal to a grain of ſand. In rivers after rain there are plenty. Rain water has many, and ſnow water more. The dew and the air is full of them.

PROB. XX.

To make a compound Microſcope with two or more convex lenſes.

125. Let the microſcope be made with the two lenſes A and B; A the object glaſs, which muſt be a very ſmall one, and very convex; F its focus. B the eye glaſs, being larger than the other. PR is the object, which muſt be placed a little beyond the focus F, of the glaſs A. Make QF, QA,

Qq continual proportionals; and make q the focus of the glaſs B. Alſo make Aq AB, AO continual proportionals, and O is the place of the eye, where looking thro' the glaſs B, it will ſee the object at q inverted. Theſe glaſſes are incloſed in a tube, which may be brought nearer, or ſet further from the object PR, as there is occaſion, by ſliding within another tube. Generally there are ſeveral ſizes of the lens A, fixt in little cells or buttons, which ſcrew upon the end of the tube, as one has occaſion to uſe a greater or leſſer magnifier. The objects are laid on thin pieces of glaſs or talk, to which they cleave, and theſe are fixed in ſliders, to be uſed occaſionally. It is beſt to ſet the tube upright, and look down perpendicularly upon the object, thro' a ſmall aperture made at O. There is a concave or convex glaſs in moſt of theſe machines, to throw light upon the object PR. Fig. 125.

Since QF, QA, Qq, are in continued proportion, Q and q, are conjugate foci; (by Prop. XXI. B. III.) and pr is the image of PR. And ſince q is the focus of B; the rays flowing from pr, and refracted by B, will emerge parallel to the eye at B; where it will ſee the image pr diſtinct, and in a contrary poſition to PR. Likewiſe ſince Aq, AB, AO are continual proportionals, A and O are conjugate foci; and (by Prob. III.) therefore O is the place where all the pencils meet, and conſequently is the place of the eye, to ſee the moſt of the object.

If D = the leaſt diſtance the naked eye can ſee diſtinctly, then the magnifying power is $\frac{D \times qA}{qB \times QA}$.

For in the ſingle microſcope B (Prob. XIX.), the image pr is magnified in the ratio of D to qB. And by the lens A, the object PR is magnified (to pr), in the ratio of Aq to AQ, (by Prop. XXXII.

Fig. XXXII. B. III.); therefore the whole magnifying
125 power is $\frac{D \times Aq}{qB \times AQ}$. Also see the Corollaries of Prob. II.

To suit the microscope to short-sighted people, the glasses A and B must be placed a little nearer together, that the rays of each pencil may come a little diverging to the eye.

The lens B must be greater than A, otherwise many of the rays passing from the object through A, would miss B; therefore it must be broad to receive them; and the axes of all the pencils will meet at O. This construction is nearly the same as in the astronomical telescope; only the object glass A is here less than the eye glass, which must be greater in the telescope.

In many of these sorts of microscopes, there are two eye glasses; and the middle one is the largest; and is placed before the image *pr*, between *q* and A. By this means the microscope receives more light. And these two eye glasses bring the rays sooner to a focus, and gives a larger view of the object.

Cor. 1. *The magnifying power of a double microscope* AB, *is* $\frac{D \times qA}{qB \times QA}$. *And is something lesser in a treble microscope: which is shorter, where* D *is the distance to which the eye can see distinctly.*

Cor. 2. *The apparent brightness of an object* PR, *is as* $\frac{A^2 \times qB^2}{qA^2}$; *putting* A *for the aperture of the object glass* A.

For the light falling upon A in the plane PAR, is as the angle it subtends at Q, that is, as $\frac{A}{AQ}$; and that cone of light is as $\frac{AA}{AQ^2}$; and that light

light is transmitted to the image *pr*, and so to the bottom of the eye; and its brightness there will be as the density, or reciprocally as the area of the image; that is, reciprocally as the magnifying power. Therefore the brightness is as the square of $\frac{A}{AQ} \times \frac{Bq \times AQ}{D \times Aq}$; that is, because D is given, as the square of $\frac{A \times Bq}{Aq}$. Fig. 125.

Cor. 3. *The visual angle is as the breadth of the eye glass.*

For if the eye glass be contracted, some of the extreme rays will miss it, and so the view is contracted.

Cor. 4. *It is found by experience, that a double microscope performs well when the aperture of* A *is* $\frac{1}{10}$ *of an inch,* AF $= \frac{7}{10}$. $Aq = 7$, *and* $Bq = 2$. *And the magnifying power* $= 36$.

SCHOLIUM.

Altho' the aberration occasioned by the figure of the glass is of no moment in telescopes, when compared with the aberration arising from the different refrangibility of the rays; yet in such small lenses as are used for microscopes, where the apertures are large, in respect to the focal distance; the aberrations by the figure become sensible, and often cause the image to be indistinct. For example, let there be a single microscope, whose lens is $\frac{1}{10}$ of an inch in breadth, and its focal distance near $\frac{4}{10}$. Then (by Cor. 6. Prop. XLI. B. III.) the aberration by the figure, will be to the aberration by the colours; as 232 to 256, almost equal. So that in small lenses, the indistinctness is caused by both sorts of aberration, and therefore cannot well be brought under any rule.

A small

Fig. 125. A ſmall aſtronomical teleſcope may be turned into a microſcope, by drawing the eye glaſs ſomething further from the object glaſs; and looking thro' it the contrary way, at the object placed near the end of it.

PROB. XXI.

To make a reflecting microſcope.

126. Let FG be a reflecting metalline concave, whoſe focus is P, BC a refracting lens for the eye glaſs, placed upon the ſame axis. O an object, placed near the focus O. Take PO, PV, PA continually proportional, and place the lens BC ſo, that A may be its focus. Then take VA, VE, VI, continually proportional, and I is the place of the eye, which thro' the eye glaſs BC, will ſee the object at A diſtinct, inverted and magnified.

For O and A being conjugate foci, the object at O will be repreſented at A inverted. And A being the focus of BC, the rays flowing from A will emerge from BC parallel to the eye at I, and cauſe diſtinct viſion.

The eye glaſs E is incloſed in a tube KL, which ſlides within another KH, which is cloſe as far as DH, but open in the ſpace DFGH, to let the light in upon the object O. A ſtop muſt be ſet at A to cut off the ſtraggling rays. To illuminate the object, it will be proper to throw the light upon it, with a concave reflector.

Cor. 1. *If* D *is the leaſt diſtance that the eye can ſee diſtinctly (as eight inches); then the magnifying power is* $\frac{VA \times D}{VO \times AE}$.

For

Fig. 119.

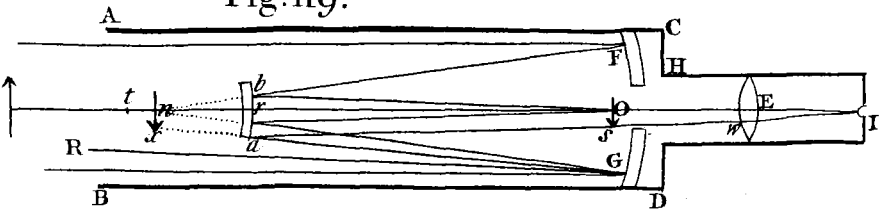

120.

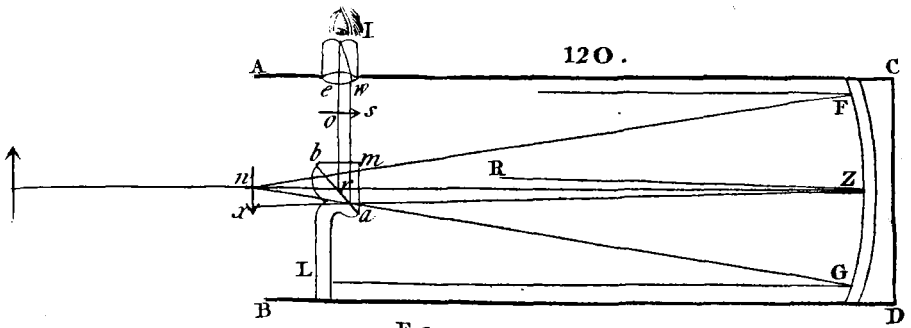

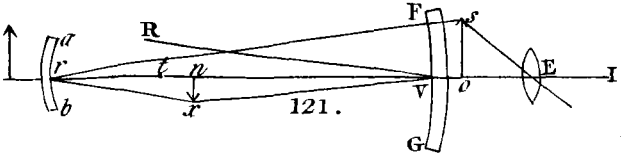

121.

122.

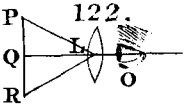

123.

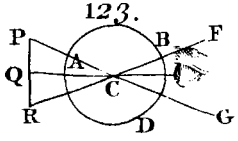

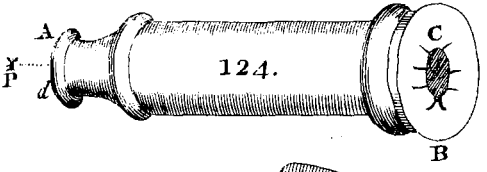

124.

125.

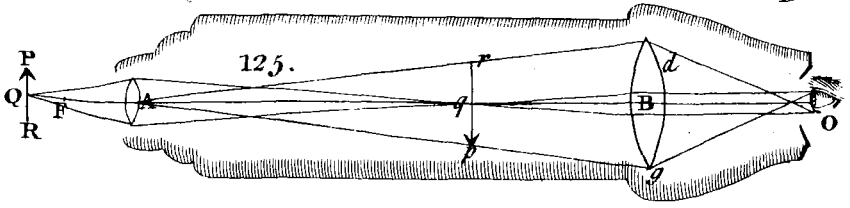

For the object is magnified at A, in the ratio $\frac{VA}{VO}$ (by Prop. XVI. B. II.) and this image at A is again magnified by the lens BC, in the ratio $\frac{D}{AE}$ (by Cor. 2. Prob. XIX.) Fig. 126.

Cor. 2. *The apparent brightness in several microscopes, is as* $\frac{AA \times AE^2}{VA^2}$. *Where* A *is the aperture of* FG.

For the light falling on FG, is as the section of the cone FOG, or as $\frac{AA}{VO^2}$; and that light carried to the image at A, and thence to the eye, has the brightness diminished in the ratio of the area of the image in the eye, or as the magnifying power. Therefore the brightness is as the square of $\frac{A}{VO} \times \frac{VO \times AE}{VA \times D}$ or of $\frac{A \times AE}{VA \times D}$ or of $\frac{A \times AE}{VA}$.

Cor. 3. *It is found by experience, that a microscope answers very well, that has the following dimensions;* FG = 1 *inch*, VP = $\frac{7}{3}$, AE = $\frac{7}{3}$. PO = $\frac{1}{14}$ PV.

SCHOLIUM.

A reflecting microscope may also be made after the manner of the Gregorian telescope, with two concave speculums, the object being placed without the tube at a small distance from the end of it. Or it may be made after the form of Mr. Cassagrain's telescope, with a concave and a small convex reflector; and the object to be placed between the principal focus and center of the large concave, and a little without the small reflector; and then each of the reflectors must have a hole made thro' it, to let the rays pass from the object.

PROB.

Fig.

PROB. XXII.

To make a solar microscope.

The use of this instrument is to magnify transparent objects which are very small; and to expose them to view by the help of the sun's light thrown upon them, and casting their image on the opposite wall of the room.

127. The construction is this; CD is a microscope glass, F its focus, its focal distance GF, which may be $\frac{1}{4}$ of an inch or $\frac{1}{2}$ an inch. The glass CD is fixt in the tube EK, which slides within another tube HI about two inches diameter, and eight or ten inches long. O is a very small object, placed on a slip of Muscovy glass or talk, in a slider, which goes thro' the tube HI, where a slit is made on each side to receive it. By sliding the tube EK containing the microscope glass CD, within the other tube HI back and forward, the glass is set to any distance from the object O, which is to be placed something beyond the focus F. The place of the object O, is adjusted thus; let L be the opposite wall of the room; make OF, OG, OL continual proportionals; and O, L will be conjugate foci, by Prop. XXI. B. III.

To illuminate the object, a lens AB is fixt in the end of the tube HI, to collect the sun beams, and throw them upon the object at O, which must be placed between the glass AB and its focus; for if the object was in the focus of CD it would be burnt or dispersed by two much heat.

This instrument is only used in a dark room, to which purpose the end of the tube HI goes thro' a ball and socket, which fits into a hole in the window shut MN; then the tube being directed towards the sun; the lens AB will cast the sun's rays

rays upon the object at O, by which it is ſtrongly illuminated. Then rays flowing from it as a luminous body, will be refracted by the lens CD, and converge to L, where it will paint the image of that body. For O and L being conjugate foci, the image will appear diſtinct at L. And therefore the tube EK muſt be ſlid in or out, till the image at L appears diſtinct. Fig. 127.

There is a contrivance of placing a looking-glaſs without the hole of the window ſhut, which may be ſet at any angle. And by turning ſome ſcrews or pins, it is ſet to ſuch an angle as to reflect the ſun's rays horizontally thro' the tube; ſo that it need not be elevated to the ſun.

By the help of this inſtrument may be viewed the animalcula in pepper water, in vinegar, or any other liquor; and likewiſe any other ſmall animals that are tranſparent.

It is by the means of the ſun's light that the picture at L becomes viſible; for ſeeing it is very much magnified; the brightneſs would decreaſe in proportion to its magnitude, and it could not be ſeen at all with common light.

Any object O is magnified in proportion of GL to GO, or the diſtance of the image from the lens CD, to the diſtance of the object from it. And therefore the ſmaller the lens CD is, or the leſſer FO is, the more the object will be magnified.

PROB. XXIII.

To make a magic Lanthorn.

ABPQR is a tin lanthorn a foot diameter; or it may be a ſquare box of wood; HI a round tube four inches diameter, and eight inches long, fixt in the ſide of it. CK another tube four inches long, ſliding within the firſt, and having a 128.

Fig. 128. convex lens D of three inches focus, fixed in it. O an object whose image is to be projected on the opposite wall of the room at L. F is the focus of D, and O is to be placed beyond F, so that OF, OD, OL, be continual proportionals; and then L will be the place of the image. This instrument is only used in a dark room; and to illuminate the object, a candle or lamp is set at E, and a concave reflector GN placed on the opposite side; so that its vertex may be in the same line with E, O, F, D; and that E and O may be conjugate foci, to the reflector.

The object at O is generally some ludicrous or frightful figure, on purpose to divert the spectators, it is painted upon a piece of plain thin glass, in dilute and transparent colours; for if they were opake they could not be represented at the focus L. They are best done with oil of spike, mixt with several sorts of colours; they penetrate the glass and dry presently. The pieces of glass the figures are painted on, are put into sliders, three of them in one slider; which are to be put in at a slit at O in the tube HI, when used, and in an inverted position; they must be placed in a line between E and D. Small living animals may also be used; and some of them make a most terrible appearance.

This machine carried into a dark room, and set on one side, and the candle or lamp E being lighted, and the box made close, the candle partly by its direct light, but more by that reflected from the speculum GN, will strongly illuminate the object at O, which being transparent, the light will pass thro' it, and being refracted by the lens CD to the opposite wall, will give there the image erect, because the object was inverted. If the image at L is not distinct; then to adjust it, draw the tube CD a little in or out, till the image appears distinct,

tinct, for it may be projected to any diſtance. As there is a deal of ſmoak produced within the lanthorn, there is a hole R at the top, to convey it away. Fig. 128.

Inſtead of the concave reflector GN, one may place a deep convex lens AB, in the end of the tube HI, which will throw the light of the candle upon the object at O, and illuminate it. Likewiſe one may place two lenſes in the tube CK, which will make the rays converge ſooner; and then there muſt be placed a ſtop between them with a hole to let the light thro', and cut off the ſuperfluous rays. The whole length of the machine may be about a foot and a half long; and the focus of the glaſs CD, ſix or eight inches. This inſtrument and the ſolar microſcope are both upon the ſame theory.

PROB. XXIV.

To make a Camera Obſcura for taking the draught of a country, a town, or any building, &c.

Let ABCD be a wooden box, about a foot and a half ſquare, open only on the ſide AD; and *efgh* a ſmaller box about ſix inches ſquare, and open only on the under ſide *gh*. This leſſer box is let into a hole in the top of the great box AB, and made cloſe and fixt there; *eopi* is a plain reflector or looking-glaſs, fixt diagonally in the ſmall box, with the reflecting ſide downwards, making an angle of 45 degrees with the perpendicular ſide, or face, *eh*. There is a tube K going thro' the ſide *eh* of the ſmall box, which ſlides in and out; in this tube is contained a convex lens about three inches diameter, and focal diſtance about two feet; this tube ſtands even with the middle of the reflector *ep*. The focal diſtance of the lens ought to be equal to the height of the middle of the reflector 129.

Fig. 129. above the bottom CD of the great box, added to the diſtance of the ſaid middle point from the lens. On the top of the ſide AD, along AL there hangs a curtain; by the help of this, the box may be made entirely dark within.

When this machine is to be uſed, it is carried into the fields, to the top of a hill, or ſome high piece of ground, where the place, whoſe draught is to be taken, may be ſeen to the beſt advantage. Then placing it upon a table, or upon a frame made on purpoſe; ſet it level upon its baſe, and let it exactly face the objects that are to be drawn. Then the draught's man is to put his head and his hands into the open ſide AD, and draw the curtain cloſe about him, that no light get in; then laying a ſheet of paper upon the bottom CD, and faſtening it that it cannot move; ſee if the objects appear diſtinct upon the paper; if they do not, move the tube a little inward or outward, till the objects do appear diſtinctly; and then it is time to draw the pictures of the objects within. Therefore having your head and hand in the box, and the curtain cloſe drawn, run over all the lines of the ſeveral objects, as they appear on the paper, with a black lead pencil, or one of chark; till you have gone thro' the whole. Then you may either keep the draught as it is, or run the lines over again with ink, and then it will ſtand in no danger of being rubbed out. Theſe inſtruments generally take in about 45 degrees.

This machine is on the ſame principle as that of darkening a room, and letting the light in thro' a lens in the window ſhut. For here the rays flowing from any object, are refracted by the lens in the tube K, and would paint the image of that object, in its focus; but being reflected by the ſpeculum *ep*, directly down to the baſe DC, they will there paint the image thereof, at the ſame diſtance

from

from the reflector, as it would have been beyond it, in their true ſituation, and proper colours. Here the lens muſt not be too broad, for then the images will not be diſtinct; nor ſhould it be too narrow, for then they will appear dark. And of all things a clear ſunſhiny day muſt be choſen for this work, ſo as to ſhine on that ſide of the objects that appears to your view. Fig. 129.

Inſtead of having a tube with the lens in the ſide of the box; the tube may be fixt perpendicular under the reflector, and then the rays will be firſt reflected, and then refracted. This requires a greater height of the box; but all the effects will be the ſame.

Alſo inſtead of having the ſide AD open, one may have it cloſe, and near the bottom make a hole to put the hand thro' with a pencil; and near the top make another hole to look thro; and there the ſide of the box ſhould be ſlanted off. The part where the hand goes thro', ſhould ſlide back and forward, that the hand may move to any part of the paper.

PROB. XXV.

To make a portable Camera Obſcura, to view diſtant objects.

ABCD is a ſquare box eight inches long, open at top and on the ſide AD. ALMD a ſquare hollow fruſtum of a pyramid five inches long, fixed cloſe to the ſide AD of the box. In the end of this pyramid LM, there ſlides a tube KI, in which is fixt a broad convex lens, whoſe focus is near the end BC. FG is a plain reflector or looking-glaſs going diagonally thro' the box, and is ſet to an angle of 45 degrees. EB is a glaſs plane, having the upper ſide unpoliſhed; AH is a lid that opens up when the machine is uſed; this lid has two wings, 130.

Fig. 130. on each ſide, hanging perpendicularly, and they reſt upon the ſides of the box when the lid is up; and ſerve to ſhade the image, made in the rough glaſs EB, from the light.

When this inſtrument is uſed, the lid is opened, and the ſide AD ſet towards the object. Then the rays coming from thence, are refracted by the lens in the tube KI, and would form the image upon the ſide BC; but being reflected upwards by the looking-glaſs FG, they form the image upon the glaſs plane EB, with the right end uppermoſt, when one faces the objects; but the left ſide is to the right, and the right to the left; where it may be ſeen diſtinctly with the eyes. If the image does not appear diſtinct, draw the tube KI out or in, gradually, till it does appear diſtinct. Then the image may be traced out on the glaſs with a black lead pencil. This operation is beſt performed, when there is a ſtrong ſunſhine upon the objects.

Or thus,

131. ABCED is a cheſt in form of a long parallelopided, nine inches broad, and two feet long; in the end AC is a tube, with two convex glaſſes F, G; this tube may be drawn out or put in, at pleaſure. H is the focus of the lens F, and FH its focal diſtance; alſo HG is ſomething leſs than twice the focal diſtance of the lens G. The lenſes F, G ought to be pretty broad, the diameter of F about $\frac{6}{10}$; of G, $\frac{4}{10}$ of a foot. IKLM is an oiled paper, or a plane glaſs, parallel to the end DE, and whoſe diſtance from the lens G is ſomething more than twice its focal diſtance, and from the end DE, ſix or eight inches. N is a ſlit big enough to look thro' with both eyes. The whole cheſt is cloſe and dark within; no light entering, but what comes thro' the tube. To make the rays converge ſooner, three lenſes may be uſed.

Then

Then the tube being directed to any objects, the rays of light proceeding from them, will be refracted by the lens F to its focus H, where the images will be made, and from thence passing thro' the lens G, will be refracted again to their focus upon the paper IKLM, being the conjugate focus to H; and therefore a person looking in at the slit N, will perceive them painted upon the paper in their true and natural position. If the images appear not distinct, draw the tube FG, in or out, till they are so. Fig. 131.

SCHOLIUM.

The pictures of external objects may be made in a dark room, by holding a concave speculum directly before a small hole in the window shut, at a distance equal to the focal distance. For the speculum will paint the images upon the window shut, or a paper held there, but inverted.

Or the pictures of objects may be made in a dark room with a convex lens placed in the window shut, or in a sky-optic ball which goes into a hole in the window shut; but then the images will be inverted. But receiving them upon a white apron, and looking down at them, they appear erect.

But to have them direct, hold a plain reflector, slanting from the lower side of the hole, upwards, to reflect the light upwards; and standing with your back to the window, you'll see the images upon the cieling, or on a paper held at a proper distance above the reflector, in their proper situation. This is like fig. 130, in this Problem.

Or thus,

Place the reflector in a contrary position; that is, close to the lens on the upper side, and slanting downwards; and it will project the images upon a horizontal paper near the floor, in their proper situation; which may be seen, by standing

Fig. 131 with the back towards the window, for this has the ſame effect, as fig. 129, in Prob. 24.

Theſe two laſt methods are preferable in this, that they repreſent objects in their natural ſituation. But they have this diſadvantage, that they want light. Therefore one muſt have very good glaſſes, a dark room, and a ſtrong ſunſhine on the objects.

PROB. XXVI.

To make a machine to magnify a perſpective draught.

132. Here ABCDE is a wooden box eight inches ſquare, open only at the bottom DI, L is a convex lens three or four inches diameter, and about two feet focal diſtance; this is placed in the foreſide of the box CD; alſo CIEF is a plane reflector, ſet at an angle of 45 degrees, and with the reflecting ſide downwards; G, G, G, G, are the legs, the inſtrument ſtands on, whoſe height muſt be ſuch, that the diſtance from the lens to the middle of the reflector, and thence to the baſe, muſt be equal to the focal diſtance of the lens; P is the draught to be viewed, laid on the baſe.

When you would view any draught or piece of perſpective, lay it flat on the baſe at P, with the upper end towards you, and looking into the box, thro' the lens L, you will ſee it diſtinctly, and magnified.

For the rays iſſuing from the draught at P, being placed in the focus, and reflected to the lens, and then emerging parallel to the eyes, will repreſent the objects vaſtly diſtant, and conſequently as much magnified; having the very ſame appearance as the natural objects themſelves would have. Only the right hand is to the left, and the left to the right.

For

Fig. 126.

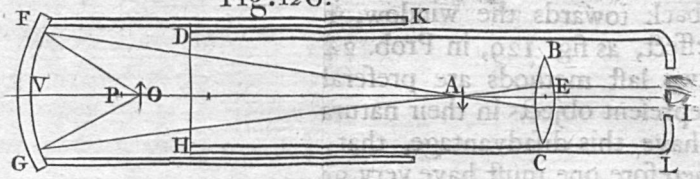
F
K
D
B
V
P
O
A
E
I
H
G
C
L

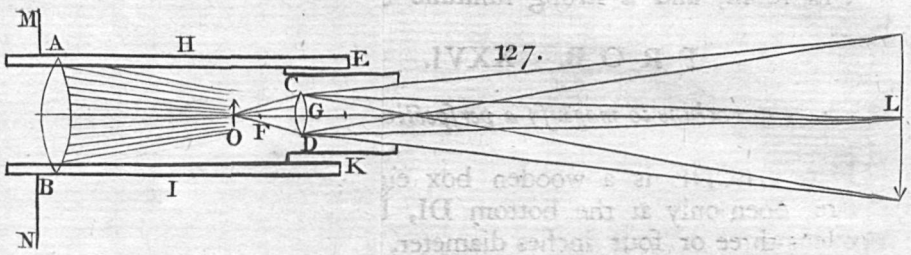
M
A
H
E
127.
C
G
L
O
F
D
K
B
I
N

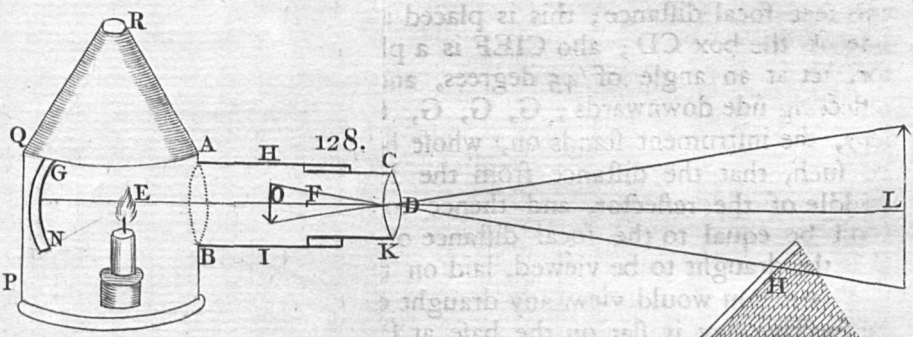
R
Q
A
H
128.
C
G
E
O
F
D
L
N
B
I
K
P

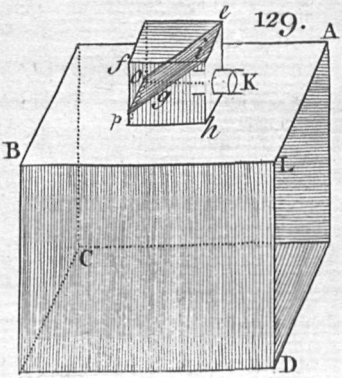
e
129.
A
f
i
K
o
g
p
h
B
L
C
D

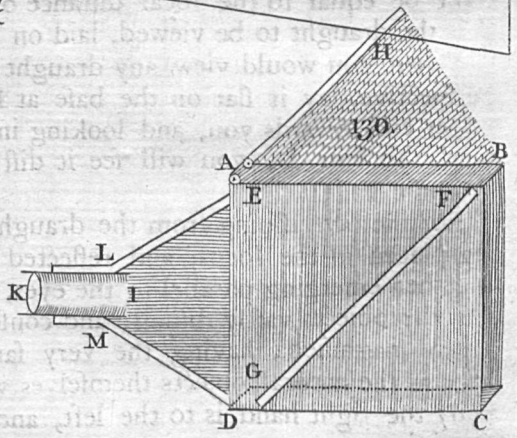
H
130.
A
B
E
F
L
K
I
M
G
D
C

For as the draught is turned upside down, it Fig. will appear contrary in the machine; that is, it 132. will appear the right way up. If it was laid the right way up, the right side would appear to the right; but as it is wrong way up, the right side appears to the left. And therefore one cannot read any writing this way, unless one can read it backward.

This machine is the same as that in fig. 129, taking away the box ABD. For as the external objects give the picture thereof on this base CD; so on the contrary the picture placed there, would send the rays back again to the several objects; but the eye takes them before they come there, and they paint their images upon the retina; but upside down, because the face is turned the contrary way.

But instead of legs, one may have it all close 133. below, the better to conceal it; as BH, which is a hollow box, close below, but above having the same apparatus as the last; at the bottom a dozen views are laid flat upon one another at P; which are all shewn successively, and then drawn back, by the rulers O, into the part GK behind. EG a thin cloth to let the light thro'; which is shut by the slider BE, when the instrument is not used. There may be two or three lenses L, on the side CH, for different people to look thro' at once; which are shut up by sliders when not used.

Otherwise thus.

ABE is a wooden box open on the top, the side 134. AC a foot long, or more, and almost as broad; D a concave reflector, 9, 10 or 12 inches broad, fixt perp. with its back leaning a little against the side BCK; its focal distance 12 inches, equal to the length AC. HG a slit in the end AE to look thro'. EH, FG two stops or bearers, fastened to the op-

posite

Fig. 134. posite sides of the box, against these the picture or draught is to rest.

When a piece of perspective is to be viewed, you must slide it down upon the pieces EH, FG, as low as the slit, and with the right end upwards; and facing the reflector; and then looking in at the slit HG, it will appear magnified and erect, but the right hand will be to the left, and the left to the right.

For since the print leans with the upper end towards the reflector, and the reflector leans a little back, the rays issuing from the picture will not be reflected back upon the picture, but will pass below, thro' the slit HG, to the eye; and the picture being in the focus of the reflector, the rays are reflected parallel upon the eye, and therefore it will see the picture distinctly, and very much magnified.

Or thus.

But the best way of all is, to place the view upon a table, to stand perpendicular against a wall, or hang it on a pin; and then to place a lens at its focal distance from it; then looking thro' the lens, you will see the prospect in its natural position every way; and magnified so as to appear like the natural place itself; especially if the view be painted in its proper colours, as it ought to be.

To have the prospect to the best advantage, the lens should not be less than four inches diameter; and two feet, or two feet and two or three inches focal distance. And in order to confine the view to your prospect, the lens should be set upright in the middle of a little box or tube six or eight inches long; at the end of which, a slit must be made an inch wide, to look thro' with both eyes, towards the object; and therefore this box must be placed horizontally to face it. The picture should be so large, as to subtend an angle of 25 or 30 degrees, at

at the focal diſtance of the glaſs. But when your picture is given, you muſt ſuit it with a glaſs, ſo that the focal diſtance of it, may be about twice the breadth of the picture. A glaſs ſhould never be of ſo ſmall a focal diſtance, that the ſcratches and deformities of the picture may appear. For at too ſhort a diſtance the glaſs will magnify theſe errors and make them viſible, and ſpoil the proſpect. The way to judge of a proper glaſs for any picture, is this; obſerve at what diſtance the picture makes the beſt and fineſt appearance to the naked eye; and that ought to be the focal diſtance of the glaſs. So that altho' a picture placed in the focus of any lens, will be magnified and ſeem at a vaſt diſtance; yet to prevent any blemiſhes or irregularities in the drawing to appear, the lens ought to be choſen by the former rule. A ſhort glaſs will not take in all the view; and a long glaſs makes the picture have but a ſmall appearance; and the eye cannot diſtinguiſh the minute parts. Fig.

I ſhall further obſerve, that to have any perſpective view appear exactly ſimilar to the place it was drawn for; the lens ought to be placed in the point of view in the air, of that picture or perſpective draught; and conſequently the focal diſtance of the lens muſt be equal to the principal ray (or line of diſtance); and when this is ſo, if it be viewed thro' that glaſs, it will give the true appearance of that place in all reſpects, in regard to the magnitude, and ſituation of the ſeveral parts. And therefore all theſe perſpective draughts ought to be ſo drawn, that the point of view be at the due diſtance, that is, equal to the focal diſtance of the glaſs proper to be uſed. The longer the focal diſtance of the glaſs is, the longer and more extended, the place appears to be, whoſe perſpective you view. And the ſhorter the glaſs, the ſhorter and more contracted is the apparent view. Both

theſe

Fig. these distort the view, the longer glass by making it too long; and the shorter by making it too short, but they do not affect the breadth. And nothing but a glass of a just length will make it appear in its just proportion. If a prospective draught be well taken, and then viewed according to these rules, you'll have the exact appearance of the place, just the same as if you was looking at it with your naked eyes.

It may be thought, that instead of a lens, two small glasses of the same focal distance, for the two eyes, may do as well. But these will not answer the same end, as one large glass; because the axes of the two pencils of rays, that fall on these two glasses, intersect at the picture, and no further off, and there make an angle; and so enter the eye; whereas they ought to be parallel. And this makes the picture not appear far enough off, and quite spoils the view.

Many other optical instruments might be inserted, but these that have been here explained, are the principal; and from these, all others of a like nature are easily understood, and their effects demonstrated by a like way of reasoning.

Likewise by the known properties of light, the phænomena of all sorts of meteors may be explained, and the reason of their colours shewn; such as the Rainbow, Corona's, Halo's, Parhelia's, Paraselene's, &c. But I shall here only explain the colours and appearances of the rainbow, because it is a phænomenon so common, that it comes under every body's observation.

PROB.

Fig.

PROB. XXVI.

To explain the magnitude, position, and colours of the Rainbow.

The rainbow never appears but when it rains in the sun-shine; and is caused by the refraction and reflection of the sun's light passing thro' the drops of falling rain. And it may be made artificially, by spouting up water, and causing it to fall down in drops, in the sun's rays; in these drops the colours will appear to a spectator standing in a due position. And the like may be shewn in globes of glass filled with water, and placed in the sun in a proper position.

To understand how the bow is made; let BNFG 135.
be a drop of rain of a spherical figure, C its center, and let AN be one of the sun's rays incident upon it at N, and then refracted to F, where let it either go out of the drop by refraction to V, or be reflected to G; and at G let it either go out by refraction to R, or be reflected to H; and at H let it either go out by refraction to S, or be reflected to I, &c. On the incident ray AX, and the refracted one NF, let fall the perpendiculars CD, CE. Draw the diameter BQ parallel to the incident ray AN. And let *m*, *n* be the sines of incidence and refraction out of air into water. Draw NC, CF.

Now in the progress of the ray AN, thro' the points N, F, G, H, &c. it is continually changeing its direction, the same way about the circle, till at last it emerges out of the drop, making the angle of refraction, equal to that at its incidence; for all the lines NF, FG, GH &c. are equal. Then to find the direction in which it at last emerges, produce NF to W, FG to T, GH to Y, &c;

Fig. &c; and then we must find the sum of the angles
135. XNW, WFT, TGY &c. and YHS, which makes the whole change of direction, or the revolution of the ray in its progress. Draw CZ perp. to FG. Then in the quadrilateral CEFZ, the angles at E and Z are right, therefore the angle ECZ + EFZ, = two right angles = EFZ + ZFW, therefore ECZ = ZFW, or ZFW = NCE = 2NCE. Put t = number of reflections, F, G, H, &c. Then since all the external angles at F, G, H are equal, the sum of them all is $= t \times$ ZFW $= 2t \times$ NCE, to which add XNF + YHS or 2XNF, and the sum is $2t \times$ NCE + 2XNF, for the whole change of direction of the ray. But XNF = XNC — ENC, and NCE = R — CNE (putting R = a right angle), therefore the whole change of direction is $= 2t$R $- \overline{2t + 2} \times$ CNE + 2CNX, or twice the quantity tR $- \overline{t + 1} \times$ CNE + CNX. And this being known, it is easy to find the angle the emerging ray makes with the incident ray AN or BQ. This is true of any ray whatsoever, but to our purpose there is but one position of the incident ray AN, which will bring the colours, and this is next to be found.

Let AN be an incident ray of any colour, and let it emerge at H, describing the tract ANFGHS. Now that the rays of any colour emerging at H, may affect the sense strongly, they ought to emerge parallel, for if they emerge and fall upon the eye, in different directions, they mix with other rays of a different colour, and cannot appear sensible. And there will be so few rays of that colour in any one direction, that they cannot excite any sensation. And since to excite a strong sensation, the rays of any one colour ought to emerge parallel, and as they are also parallel at their incidence; therefore we must find what position, or what angle of incidence, the ray AN must have, that all the rays of that colour,

colour, emerging at a ſmall diſtance from H, may be all parallel to HS. Now this can only be when the ſum of all the angles $2t\mathrm{R} - \overline{2t+2} \times \mathrm{CNE} + 2\mathrm{CNX}$ is a maximum or minimum. For by the nature of a maximum or minimum, ſuch a quantity remains the ſame for a ſmall variation of the arch BN. Now we may obſerve, that when the arch BN is very ſmall, the arch FQ is very ſmall; and as BN grows greater, QF grows greater, and BF leſſer; and when BN approaches a quadrant, QF grows leſs again, and BF bigger. So that BF firſt decreaſes to a certain limit, and then increaſes again, and at that limit it is at its minimum. But the quantity $2t\mathrm{R} - \overline{2t+2} \times \mathrm{CNE} + 2\mathrm{CNX}$ depends much upon the ſituation of F, and therefore will be at its minimum when the rays at H emerge parallel. Now ſince $2t\mathrm{R}$ is given, $2t\mathrm{R} - \overline{2t+2} \times \mathrm{CNE} + 2\mathrm{CNX}$, will be at is minimum when $\overline{2t+2} \times \mathrm{CNE} - 2\mathrm{CNX}$ is a maximum, or when $\overline{t+1} \times \mathrm{CNE} - \mathrm{CNX}$ is a maximum. But (by Prob. 83. Sect. VII. Algebra) $\overline{t+1} \times \mathrm{CNE} - \mathrm{CNX}$ is a maximum, when $\overline{t+1} \times$ increment of CNE = increment of CNX. Fig. 135.

Let $y = \mathrm{CD}$ or NM the ſine of incidence; $\mathrm{CN} = 1$; m, n the ſines of incidence and refraction, and take Nn a very ſmall increment or decrement of BN, and drawing no parallel to AN, No will be the increment or decrement of MN; then $\frac{n}{m}y = \mathrm{CE}$ the ſine of refraction, and its increment $= \frac{n}{m} \times \mathrm{N}o$. And by the nature of the circle, coſine $(\sqrt{1-yy})$: radius $(1) :: \mathrm{N}o : \mathrm{N}n = \frac{\mathrm{N}o}{\sqrt{1-yy}}$, the increment of BN or $\angle$ CND. Alſo coſine $\left(\sqrt{1-\frac{nnyy}{mm}}\right)$: radius

Fig. 135. dius (1) : : increment of the ſine of refraction $\left(\frac{n}{m} \times No\right) : \frac{n \times No}{m\sqrt{1-\frac{nnyy}{mm}}}$, the increment of the arch or angle of refraction CNE. Therefore $\overline{t+1} \times \frac{n \times No}{m\sqrt{1-\frac{nnyy}{mm}}} = \frac{No}{\sqrt{1-yy}}$. Put $p = t + 1$, then $\frac{pn}{\sqrt{mm-nnyy}} = \frac{1}{\sqrt{1-yy}}$, and $pn \times \sqrt{1-yy} = \sqrt{mm-nnyy}$; and ſquaring, $ppnn - ppnnyy = mm - nnyy$; and reducing, $ppnnyy - nnyy = ppnn - mm$; and $y = \sqrt{\frac{ppnn-mm}{pp-1.nn}}$. And y being known, the angles CND and CNE are known, and conſequently the quantity of the angle of deviation of the ray, $2t$R$-p \times$ CNE $+$ 2CNX. And the angle in which HS cuts the incident ray AN or BQ, will be known; for if the deviation be 180 degrees, the incident and emergent rays will coincide, and the emergent ray will return back to the ſun.

Since y depends upon the quantities of m and n, it is evident that the rays of different colours, having a different degree of refrangibility, will have different limits of BN, and will emerge parallel in different points H, and will cut BQ at different angles. And theſe ſeveral ſorts of rays being ſeparated from one another, will appear each in their proper colours.

For the firſt rainbow; if light paſſes out of air into water, m and n (by Schol. Prop. II. B. III.) will be 108 and 81 for the leaſt refrangible rays, or the red; and 109 and 81 for the moſt refrangible rays, or the violet. And therefore in this bow, where $m = 108$, $p = 2$, y comes out $=$ 86036 $=$ S. 59 22 $=$ CNX, and CNE $=$ 40 11. And 2R $-$ 4 CNE $+$ 2CNX $=$ 137 58, and this

or

or its supplement 42 2 is the angle the emergent ray makes with the incident ray for the red. And in like manner when $m = 109$, the angle which the emergent ray makes with the incident ray, will be found 40 17, for the violet. Fig. 155.

Again in the second bow where $p = 3$, $m = 108$, we shall find $y = 95015 = S.\ 71\ 50 = CNX$, and $CNE = 45\ 27$; and $4R - 6CNE + 2CNX = 230\ 57$ which exceeds 180 by 50 57, the angle made with the incident ray, for the red. And when $m = 109$, the angle the violet emergent ray makes with the incident ray will be 54 7.

Now suppose O to be the eye of the spectator, and OP a line drawn thro' the sun and the eye. And let the angles POE = 40 17, POF = 42 2, POG = 50 57, and POH = 54 7. And let these angles be turned about their common side OP; then shall the other sides OE, OF, OG, OH, describe the extreme arches of two rainbows AFBE, and CHDG. For if E, F, G, H be drops of water placed any where in the conical surfaces described by OE, OF, OG, OH, and be illuminated by the sun's rays SE, SF, SG, SH; the angle SEO or POE of 40 17 will be the greatest angle in which the violet rays will after one reflexion be refracted to the eye; and therefore all the drops in the line OE, shall send the most refrangible rays most copiously to the eye, and thereby strike the senses with the deepest violet colour. And in like manner the angle SFO or POF of 42 2, will be the greatest angle under which the red rays can emerge out of the drops, and therefore will come most copiously to the eye and strike the senses with that colour. And the rays that have intermediate degrees of refrangibility, shall come most copiously from drops between E and F, and strike the senses with the intermediate colours; that is, from the inside to the outside of the bow, the colours will 136.

Fig. 135. appear in the order violet, indigo, blue, green, yellow, orange, red.

Again in the ſecond bow, the angle SGO or POG of 50 57 ſhall be the leaſt angle under which the red rays, after two reflexions can emerge out of the drops, and come moſt copiouſly in the line OG, and ſtrike the ſenſe with that colour. And the angle SHO or POH of 54 7 ſhall be the leaſt angle in which the violet rays after two reflexions, can emerge out of the drops, and therefore they will come moſt copiouſly to the eye; and ſtrike the ſenſe with that colour. And by the ſame argument the drops between G and H, ſhall ſtrike the ſenſe with the intermediate colours; therefore from the inſide to the outſide of the bow, the colours will appear in this order, red, orange, yellow, green, blue, indigo, violet. And ſince theſe four lines OE, OF, OG, OH, may be ſituated any where in the conical ſuperficies, what is ſaid of the drops and colours in theſe lines, is to be underſtood of the drops and colours every where in thoſe ſurfaces. But the ſecond bow, by reaſon of the light loſt by two reflexions does not always appear, and is always fainter than the firſt.

Theſe would be the angles if the ſun was but a point, but from his apparent diameter, the breadth of the bows will be increaſed half a degree, whence the breadth of the inner bow will be 2 15, and of the outer one 3 40; and their diſtance 8 25; the radii of the inner bow 40 2 and 42 17, of the outer one 50 42 and 54 22; and this appears to be ſo by obſervation, when their colours are ſtrong and lively.

136. It may be obſerved, that all the rays but the violet in the line SE, will emerge from E in a greater angle than SEO made by the violet, and will therefore all paſs below the eye: and all the rays but the red, in the line SF, will emerge from F in a leſſer angle than SFO made by the red, and will therefore

paſs

pafs above the eye; by which means, only red will appear in the line OF, and only violet in the line OE. Fig. 136.

They that have a mind to measure the bow, may observe that its radius is equal to the height of the bow and the height of the sun together; and therefore is easily measured with a quadrant. And if the sun's altitude be greater than 42 17, the inner bow cannot be seen; nor the exterior one, if his altitude exceed 54 22.

In the third and fourth rainbows y is .97373 and .98366 respectively, and CNX = 76 50 and 79 38. Whence $2i$R + 2CNX — $2p$×CNE = 318 20, and 400 31 respectively, putting m and n as 4 to 3 for the red rays. And therefore in the 3d rainbow, the emerging ray cuts the incident ray at an angle of 41 40; and in the 4th, at an angle of 40 31, both moving from the sun. And therefore looking towards the sun, the red rays in these rainbows would appear at the distance from him of 41 40 and 40 31 respectively, and nearly coinciding. And in the 3d the violet would be towards the sun; but in the fourth the violet is from the sun. But their light is weakened so by reflexions, that they never appear. 135.

Cor. 1. *The angle of revolution* $2i$R + 2CNX — $2p$×CNE *will come to its limit when* ND *is to* NC : : *as* $\sqrt{mm-nn}$ *to* $\sqrt{pp-1\times nn}$. *And* ND *is to* NE : : *as* m *to* pn.

For $ND^2 = 1 - yy = 1 - \frac{ppnn-mm}{pp-1.nn} = \frac{mm-nn}{pp-1.nn}$.

And $NE^2 = 1 - \frac{nn}{mm}yy = 1 - \frac{ppnn-mm}{pp-1.mm} = \frac{ppmm-ppnn}{pp-1.mm}$. Therefore ND : NC : : $\sqrt{\frac{mm-nn}{pp-1.nn}}$: 1 : : $\sqrt{mm-nn}$: $\sqrt{pp-1.nn}$. Also ND : NE : : $\sqrt{\frac{mm-nn}{pp-1.nn}}$: $\sqrt{\frac{ppmm-ppnn}{pp-1.mm}}$: : $\sqrt{\frac{1}{nn}}$: $\sqrt{\frac{pp}{mm}}$: : $\frac{1}{n}$: $\frac{p}{m}$: : m : pn.

Cor.

Fig. 136. Cor. 2. *When the angle of revolution (or change of direction) of the emerging ray differs not much from a ſemicircle or any odd number of ſemicircles; one muſt look for the bow towards the ſun's oppoſition. But when it differs not much from a circle or any number of circles, one muſt look towards the ſun for the bow. Thus the firſt and ſecond bows are ſeen oppoſite to the ſun, and the third and fourth towards it.*

For if the revolution be a ſemicircle, or 3, 5, 7 &c. ſemicircles, the direction of the ray is towards the ſun; and therefore, that it may enter the eye, one muſt look the contrary way. But if the revolution be 1, 2, 3 &c. whole circles, the ray moves directly from the ſun, and therefore to receive it into the eye, one muſt look towards the ſun; for the face muſt be ſet againſt the motion of the ray.

Cor. 3. *If the angle of revolution falls ſhort of a ſemicircle or any number of ſemicircles, the violet colour will be on the inſide the bow. But if it exceed them, the violet will be on the outſide. Thus in the firſt and third bows, the violet is within; and in the ſecond and fourth, without.*

For the violet rays by a greater refraction, make a greater revolution than the red; and therefore when the revolution angle falls ſhort, the violet ray will come nearer a ſemicircle, and make a leſs angle with the incident ray; and therefore will be neareſt the center of the bow. But the contrary will happen when the revolution is greater than a ſemicircle, for then the violet recedes farther off, and makes a greater angle with the incident ray; and ſo it will be furtheſt from the center of the bow. Thus in the firſt bow the violet is within, in the ſecond without, in the third within, and in the fourth without. But after 3 or 4 reflexions the light is ſo weak as not to affect the ſenſes; and ſo the third and fourth bows, and thoſe that follow, never appear; and therefore I ſhall ſay no more about them.

FINIS.

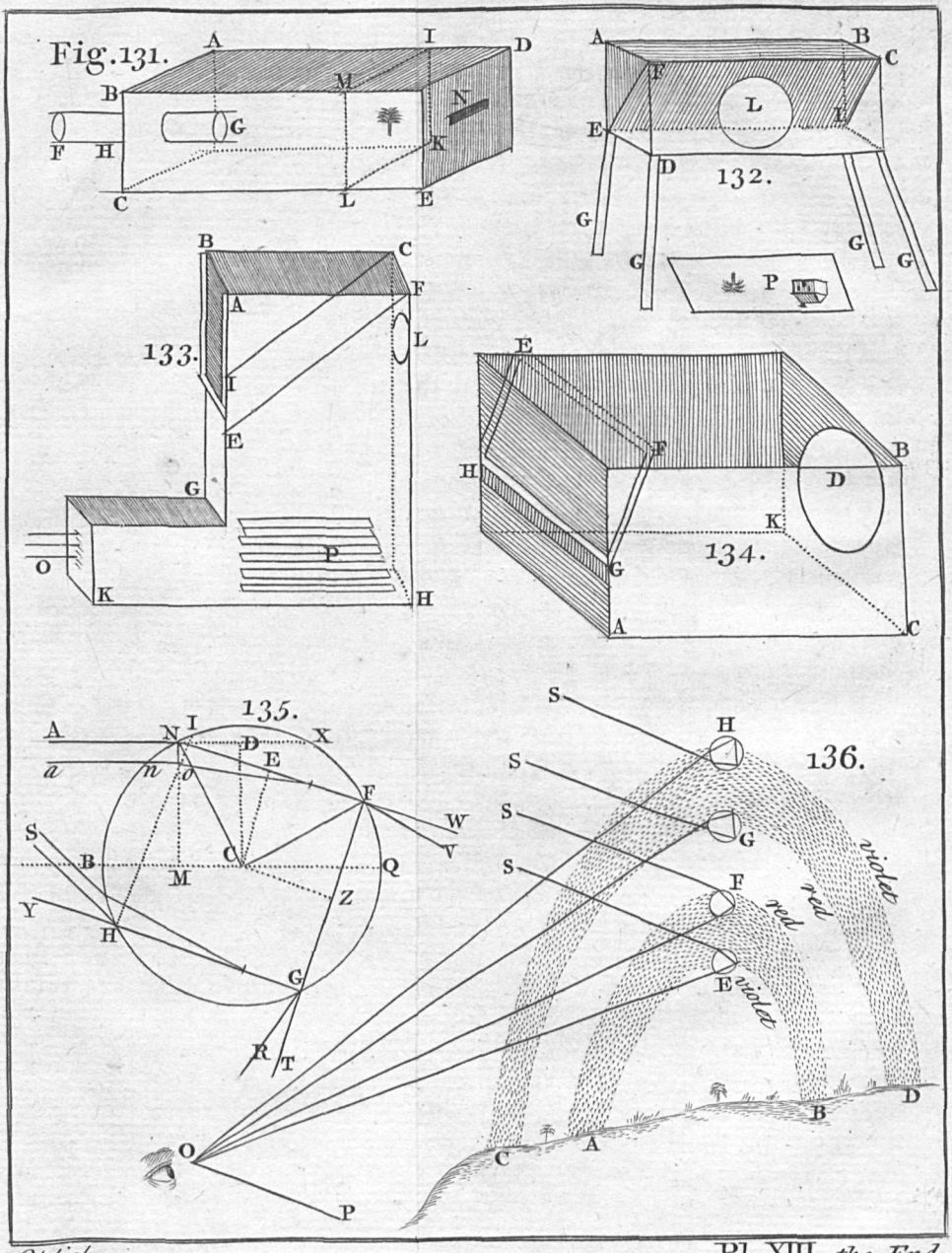

Opticks. Pl. XIII. *the End.*

ERRATA in the OPTICS.

page	line	read
85	5	$\frac{Cfxx}{\frac{rr}{2Cf} - x}$.
169	14	$\sqrt{\frac{q-s}{q+s}}\, t$.
173	15	thro' the lens B,
220	25	microscope, which is shorter. Where
224	29	focus of AB.

ERRATA in the PERSPECTIVE.

In the Plates.

Fig.	
19	For *t* put *l*.
57	The pricked lines 41, 1S, and some others wanting.

BOOKS printed for J. NOURSE, opposite Catharine Street in the Strand, Bookseller to his MAJESTY.

I. THE Elements of Trigonometry, by W. Emerson. The second Edition, with large Additions; together with the Tables of Sines, Logarithms, &c. 8vo. 1764. Price 7.

II. The Elements of Geometry, by W. Emerson, 8vo. 1763. Price 4s. 6d.

III. A Treatise of Arithmetick, by W. Emerson, 8vo. 1763. Price 4s. 6d.

IV. A Treatise of Algebra, by W. Emerson, 8vo. 1764. Price 7s.

V. Emerson's Navigation. The second Edition, 12mo. 1764. Price 4s.

VI. A New Method of Increments, by W. Emerson, 8vo. 1763. Price 7s. 6d.

VII. The Arithmetick of Infinites, Conic Sections, and the Nature and Properties of Curve Lines. 8vo. 1767. Price 7s. 6d. by Wm. Emerson.

VIII. A

VIII. A Treatise of Algebra, by T. Simpson. The Third Edition. 8vo. 1766. Price 6s.

IX. Mathematical Dissertations on a Variety of physical and analytical Subjects, by T. Simpson, 4to. 1740. Price 7s.

X. Miscellaneous Tracts on some curious and very interesting Subjects, by T. Simpson. 4to. 1757. Price 7s.

XI. Trigonometry, Plane and Spherical, with the Construction and Application of Logarithms, by T. Simpson, 8vo. Second Edition, 1765. Price 1s. 6d.

XII. Essays on several curious and useful Subjects, in speculative and mixed Mathematics, by T. Simpson, 4to. 1743. Price 7s.

XIII. The Doctrine of Annuities and Reversions, by T. Simpson, 8vo. 1742. Price 3s.

XIV. Appendix to ditto, 8vo. Price 6d.

XV. The Elements of Geometry, by T. Simpson. The Third Edition, with large Alterations and Additions, 8vo. 1768. Price 5s.

XVI. Select Exercises for young Proficients in the Mathematics, by T. Simpson, 8vo. 1752. Price 5s. 6d.

XVII. The Doctrine and Application of Fluxions, by T. Simpson, 2 vols. 8vo. 1750. Price 12s.

XVIII. The Elements of Euclid, by R. Simson. The Third Edition, to which are annexed, Elements of Plain and Spherical Trigonometry, 8vo. Price 6s.

XIX. The Elements of Navigation, by J. Robertson. The Second Edition, 2 vols. 8vo. 1764. Price 18s.

XX. The Elements of Astronomy, translated from the French of Mons. De la Caille, by J. Robertson, 8vo. Price 6s. 1750.

XXI. A general Treatise of Mensuration, by J. Robertson, 12mo. 1767. Price 3s.

XXII. A Treatise on the Use of Mathematical Instruments, by J. Robettson, 8vo. 1757. Price 5s.

XXIII. A Treatise containing the Elementary Part of Fortification, by J. Muller, 8vo. Second Edition. 1756. Price 6s.

XXIV. A Course of Lectures in Natural Philosophy, by R. Helsham, M. D. 8vo. Fourth Edition. 1767. Price 5s.

XXV. An Introduction to the Use of the Globes, and the Orrery, by D. Jennings, D. D. Third Edition. 8vo. 1766. Price 4s.

PERSPECTIVE:

OR, THE

ART of drawing the Representations of all OBJECTS upon a Plane.

In TWO SECTIONS.

SECT. I. Demonstrates the Principles whereon this Art is founded.

SECT. II. Gives the practical RULES for Operation; with great Variety of Examples.

Decipimur specie recti: ——— HOR.

Blank page retained for pagination

THE

PREFACE.

THE Art of Perſpective *is properly a branch of Optics; for it depends on this optic principle, that all the rays of light flowing from the ſeveral parts of an object, move in right lines to the eye. And therefore the images of theſe parts muſt be ſomewhere in theſe viſual rays; and conſequently muſt be where theſe lines interſect the picture. Perſpective is a kind of projection, for here the picture being placed at a convenient diſtance between the eye and the object, (or it may as eaſily be placed beyond the object;) the eye projects the ſeveral points, and parts, of the body, upon that picture, by lines drawn from the eye to the parts of the body; and that by certain rules, which are to be explained in this book.*

Perſpective is an art abſolutely neceſſary to be underſtood by all thoſe that practice drawing. From this it derives all its beauty and juſtneſs. It is alſo of great uſe in Architecture, Fortification, Engraving, Carving, and all the mechanical arts; and particularly in Painting. It is of admirable uſe for deſcribing the figures of ſolids, or of any buildings, and of all ſorts of machines. An artiſt cannot put his deſign into execution without this; for all neat and curious drawing ſignifies nothing without it, if the deſign is not executed according to the rules of this art. By this, the figures and ſhapes of all natural objects may be imitated to the life, which no other art can equal. By

this are contrived those deceptions in vision, which so agreeably delight and please the eye.

I took notice in the Optics *how delightful a study that is; but the greatest share of that pleasure belongs to Perspective. For what greater pleasure can one enjoy by the eye, than to see a grand building, a large country, or great city, so truly drawn and finely coloured, which being placed at a due distance, shall appear to the eye in its true proportions, and in all its pomp and beauty, even to vie with Nature itself; and even to out-do it in some cases. For if it be drawn in summer, with all the beauty of flowers, and verdure of leaves; such a draught look'd at in winter will appear gay; whilst the place itself, now destitute of all these beauties and natural colourings, gives but a disagreeable prospect? Can it fail to please and charm the beholder to see a whole country have the very same appearance, and the same beauty, as the place it was drawn for, and even of the same magnitude when seen thro' a lens at a due distance. And if it be a place one knows, how agreeably one is surprized to find himself in it. Who would not be struck at so agreeable a delusion?*

Hence it has been objected by some, that this art does not shew us truth, but deceives us with false appearances; alledging, that nothing appears to us as it really is, but in a quite different form. It is true, if we regard the picture itself as an object, which is a piece of paper, being nothing but a plane surface perpendicular to the horizon, with several lines and colourings laid on it; then it gives us a false appearance of itself. But nobody that draws a picture, ever intends that it should represent itself, and therefore this objection will be nothing to the purpose. For the picture is always designed to represent a thing that is out of the picture; and therefore if the picture truly represents that thing, then it shews us truth. And if it does not in all respects, represent it truly; then so far

as

as that fails, it does not represent the thing intended, but something else; and then indeed it shews us falshood. So that if the picture is truly drawn, it shews truth; but it never shews falshood, but when it is falsely drawn.

As the art of painting has always been in great esteem, therefore we need not wonder that men of excellent talents, have taken great pains in perfecting that art. But without the knowledge of Perspective, that art will always be deficient and imperfect; and therefore every painter that is ignorant of Perspective will unavoidably run into errors. Perspective then is the compleating of the art of painting, without which no painting can be perfect. And therefore no person should engage in the art of painting; except he resolve to make himself acquainted with the rules of Perspective.

The inventive part of painting, is nothing but the original design, contrived in the imagination of the artist; but the executive part is wholly tied to the rules of art, which must not be transgressed upon any account. Therefore he that designs to be a painter, must first of all learn Perspective; and when he has done this, and informed his judgment what alterations happen to figures, when drawn upon a plane; he ought then to be put to drawing by sight, and exercise himself in this along with Perspective, till he becomes sufficiently perfect in both. Nothing ought to be more familiar to a painter than Perspective; for it is the only thing that can make the judgment correct; and will help the fancy to invent with ten times more ease, than it could do without it.

Yet it is not necessary or even possible, that the strict rules of Perspective should be applied to the drawing every minute part of a body. For there would be such a confusion of lines, and their intersections would be so near together, that no exactness could be expected from thence; such parts as these ought to be drawn by the

eye.

eye. Nevertheless, the rules of Perspective must direct ones judgment, and be a guide to his eye, how they are to be drawn.

In the first section of this book, I have laid down the fundamental propositions on which the practical part of Perspective is founded; and given their demonstrations, that their truth and certainty may appear. And in the second section, I have given all the rules of practice, for performing the several operations, in drawing any points, lines or solids in Perspective. And have given the reasons and demonstrations of these rules, exceeding short; being easily deduced from the propositions in the first section. And have also given great plenty of examples to illustrate the rules, and to satisfy such as have a great desire for obtaining the arts of drawing and painting. And by frequent use and practice several compendious methods of working will occur of themselves to every practitioner. All this is principally for upright pictures, the only sort that are useful. For as to inclined pictures, they require more lines and more labour; and no object drawn in them ever appears so well as in an upright picture; so that they are nothing but a piece of curiosity. Yet least it should happen that any object requires to be drawn upon an oblique plane, which cannot be put into any other position; I have also shewn the properties of these pictures, and the methods of drawing upon them, in a general way; with several examples thereto, which will make the method very plain and clear, to any body that is desirous to know how to draw upon this kind of pictures.

W. Emerson.

Fig.

PERSPECTIVE.

DEFINITIONS.

DEF. I.

PERSPECTIVE is the art of representing any object upon a plane; just as it appears to the eye, in any given situation. When the plane is perpendicular to the horizon, it is called *common Perspective*. When the eye is infinitely distant from that plane, it is called *military Perspective*.

DEF. II.

The *Picture* is that plane upon which the object is represented, as ABCD; which is perpendicular to the horizon; and is supposed as transparent as glass. This is also called the *Table*, or *perspective Plane*. 1.

DEF. III.

The *geometrical Plane* is a plane parallel to the horizon, in which the visible objects are situated as FGHI. And the *situation* of any point of an object, is where a perpendicular from that point, cuts this plane.

DEF. IV.

The *horizontal Plane* is a plane passing thro' the eye, parallel to the horizon, as KLMN; or rather in the horizon. Therefore this is parallel to the geometrical plane, and perpendicular to the picture.

DEF. V.

The *vertical Plane* is a plane passing thro' the eye, perpendicular to the picture, and to the horizon, as OPQR.

Fig. 1.

DEF. VI.

The *directing Plane* is a plane passing thro' the eye, parallel to the picture, as KNHI. And its intersection IH with the geometrical plane, is the *Line of Extremes*.

DEF. VII.

The *ground Line*, is the section of the picture, and the geometrical plane, as DC. It is also called the *Base Line*, or *fundamental Line*.

DEF. VIII.

The *horizontal Line* is the intersection of the picture, and the horizontal plane, as TV. Whence this is parallel to the ground line. It is also called the *vanishing Line*. But in a general sense, the *vanishing Line* of any plane, is the section of its parallel plane drawn thro' the eye, with the picture.

DEF. IX.

The *principal Ray*, is a line drawn from the eye, perpendicular to the picture, as ES. Therefore this lies in the horizontal plane.

DEF. X.

The *Line of Station*, is the section of the vertical plane with the geometrical plane, as RQ.

DEF. XI.

The *Line of Distance* is that part of the line of station, contained between the directing plane, and the picture; as RX. Hence the line of distance is parallel and equal to the principal ray.

DEF. XII.

The *vertical Line* is the line in which the vertical plane cuts the picture; as SX.

DEF. XIII.

The *Hight of the Eye* is a perpendicular passing from the eye to the geometrical plane, as ER. This is equal and parallel to the vertical line.

DEF.

Fig. 1.

DEF. XIV.

The *Point of View* is the point where the eye is fixed, as E.

DEF. XV.

The *Point of Sight* is the point where the principal ray cuts the picture, as S. Therefore this is in the horizontal and vertical lines. It is alſo called the *principal Point*, or *Center of the Picture*.

DEF. XVI.

The *Point of Diſtance* is a point in the horizontal line, whoſe diſtance from the point of ſight is equal to the principal ray, as V or T; ſuppoſing VS or TS, equal to ES.

DEF. XVII.

The *accidental Point* of a right line is the point, where a line, drawn thro' the eye, parallel to the line propoſed, cuts the picture. This is alſo called the *vaniſhing Point*. Hence all lines parallel to one another, have the ſame accidental point. And all lines perp. to the picture, have the point of ſight for their accidental point. And all lines parallel to the picture have no accidental point.

DEF. XVIII.

The *Plan* is the projection of an object upon the geometrical plane, by lines drawn from all points of the object, perpendicular to that plane. This is alſo called the *Ichnography* of the object, or the *Baſe* of it.

DEF. XIX.

The *Front* is the fore view of an object, or the ſection of it parallel to the picture; or it is the projection of it upon a plane parallel to the picture.

DEF. XX.

The *Profil* is the ſide view, or ſection of an object, parallel to the vertical plane. It is taken for the appearance of any ſide.

Fig.

DEF. XXI.

1. *Schenography* is the representing solids, or such objects as are elevated in the air.

DEF. XXII.

The *optic Cone* is the cone of rays proceeding from the eye to all the points of an object, and cutting the picture.

SCHOLIUM.

In general, the things to be drawn, are called *Objects* or *Originals*; and their pictures when drawn, are called *Representations*, *Appearances*, *Figures*, *Images*, or *Projections*.

AXIOMS.

1.

The appearance or representation of any point of an object, is where the right line, drawn from the eye to that point of the object, cuts the picture.

2.

If any part of an object touches the picture, its appearance will be in that part of the picture which it touches.

3.

All parts of objects lower than the eye, or below the horizontal plane, will be represented below the horizontal line, in the picture: and those that are higher, will be represented above it.

4.

All objects on the right hand of the vertical plane, will be represented on the right hand of the vertical line; and those on the left hand, on the left side of it.

5.

If a right line in the object passes thro' the eye, it will be represented in the picture by a single point.

6.

Any plane (in the object) passing thro' the eye, will appear only a right line in the picture.

SECT.

Fig.

SECT. I.

The fundamental Principles of PERSPECTIVE.

PROP. I.

IN military perspective, lines that are parallel in the object, are represented by parallel lines in the picture. And they are shortened in the picture, in the ratio of the radius to the sine of inclination of the visual rays.

For let there be two parallel lines in any object; and suppose two planes to pass thro' these two lines and the eye. Now since the eye is supposed infinitely distant, in this sort of perspective; therefore these planes, which only intersect at an infinite distance, may be looked upon as parallel. But (Geom. V. 11.) if two parallel planes be cut by a third; their common sections are parallel. And therefore the two planes cut the picture in two parallel lines; which represent the two parallel lines in the object. And it is equally the same if there is never so many of these parallel lines. And it is evident that their lengths are diminished in the ratio of radius to the sine of obliquity.

Cor. 1. *If the eye be at a great distance; lines that are parallel in the object, are represented by lines nearly parallel in the picture.*

Cor. 2. *Visual rays from the eye, cut all parallels, and all parts of them, at the same angle.*

This follows from the parallelism, both of the rays and the lines.

Cor. 3. *Equal parallel lines have their images equal.*

Fig.

PROP. II.

2. *In common perſpective, a right line in the object, which paſſes not thro' the eye, is repreſented by a right line in the picture.*

Let GH be the right line, E the eye; draw EG, EH, cutting the picture in *g* and *h*; then *g* and *h*, repreſent the points G and H (by Ax. 1.). And thus all the points between G and H are repreſented by right lines drawn from thence to E; and all theſe lines are in the plane EGH. And ſince that plane interſects the plane AC in the right line *gh* (Geom. B. V. Prop. 3.) therefore all the points in GH are repreſented by all the points in *gh*; or the right line GH by the right line *gh*.

Cor. *Hence the lines* GH *and gh, are in one and the ſame plane.*

PROP. III.

If a right line be parallel to the picture, its repreſentation in the picture, will be parallel to that right line.

2. For let GH be a line parallel to the picture, and ſuppoſe a plane to paſs thro' it parallel to the picture, then the plane EGH being cut by the two parallel planes GH, and AC; the ſections GH, *gh* will be parallel (by Prop. XI. B. V. Geometry.)

Cor. 1. *If a right line be parallel to the ground line; its appearance in the picture will be parallel to the ground line.*

Cor. 2. *If a right line be parallel to the vertical line; its appearance in the picture will be perpendicular to the ground line.*

Cor.

Cor. 3. *If a line parallel to the picture intersect the geometrical plane, and make any angle with it; its figure or appearance in the picture will make the same angle with the ground line.* Fig. 2.

Cor. 4. *If two lines parallel to the picture, intersect; their representations in the picture, will make the same angle, as the original lines.*

For each of them makes the same angle as its original; and therefore the differences of each two are equal; that is, the angles which the originals and their representations make, are equal.

Cor. 5. *All these things hold good, when the picture is inclined to the horizon.*

PROP. IV.

The figure or appearance of any right line in the picture, tends to the accidental point of that line.

Let GH be the original line, *gh* its figure or appearance in the picture, P the accidental point of it, E the eye. Then (Def. 17.) since EP and HG are parallel; EP and HG are in the same plane, which plane passes thro' E and P. Likewise (Cor. Prop. II.) *gh* is in the plane EGH; therefore all the points P, *g*, *h* are in one plane, which plane intersects the picture in the line P*gh*; therefore *gh* produced, passes thro' P. 3.

Cor. 1. *The representations of all lines parallel to* GH, *do all meet in the accidental point* P.

Cor. 2. *The appearances of all lines perpendicular to the picture, tend to the point of sight.*

Cor. 3. *The appearances of all lines, in or parallel to, the geometrical plane, making an angle of* 45 *degrees with the ground line or picture; tend to the point of distance on that side.*

Fig. 3. Cor. 4. *The appearance of a right line, passes both thro' the accidental point, and thro' the point where the original cuts the picture.*

PROP. V.

If two equal right lines be parallel to, and equidistant from, the picture; their representations will be equal.

4. Let the lines GH, KI, be equal, and both parallel to the picture AC, and at equal distances from it; and *gh*, *ki* their representations. Draw HI and *hi*. E is the eye. Then by reason of the parallel planes GHIK and AC, the triangles EGH, *egh*; also EHI, *ehi*; and EIK, E*ik*, are similar each to each. Therefore, GH : *gh* : : EH : E*h* : : HI : *hi* : : EI : E*i* : : IK : *ik*. But GH = IK, therefore *gh* = *ik*.

Cor. 1. *If several lines are parallel to, and equidistant from, the picture; their representations will be to one another, in the same proportion as the original lines.*

For we have GH : *gh* : : IK : *ik*; or GH : IK : : *gh* : *ik*.

Cor. 2. *If a right line parallel to the picture, be divided into equal parts; the images or representations of these several parts, will be equal.*

Cor. 3. *Two equal right lines proceeding from one point, and both parallel to the picture; will have their appearances equal in the picture. And the angle they make in the picture, will be equal to the angle made by the originals.*

For the representations are parallel to the originals, by Prop. III.

Cor. 4. *All these things hold equally for an inclined picture.*

PROP.

Fig.

PROP. VI.

If a circle be parallel to the picture, its figure in the picture will be a circle, in any sort of projection.

Let E be the eye, BD the circle. Then since 5.
the optic cone EBD, is cut by the plane of the picture AC, parallel to the base of the cone, therefore (by Cor. Prop. LXXXIX. B. I. Conic Sections) the section *bd* will be a circle.

Cor. 1. *If a circle be so placed, that the optic cone, be cut by the picture, so that the angles on opposite sides may be equal, which are made by the picture and by the base; then also the appearance in the picture will be a circle.*

For then it is cut in sub-contrary position; and therefore (by the same Prop.) the section is a circle.

Cor. 2. *In other cases when a circle is not parallel to the picture; its appearance is an ellipsis; supposing the optic cone to be cut on both sides by the picture.*

PROP. VII.

The appearance of any plane figure parallel to the 5.
picture, will be similar to the original.

Let GHIK be the plain figure whose representation is *ghik*. Then since the optic pyramid EGHIK is cut by the plane of the picture AC, parallel to the base GHIK; therefore the section *ghik* will be similar to GHIK (by Cor. 1. Prop. XVII. B. VI. Geometry.)

PROP. VIII.

The vanishing or accidental points, of all lines drawn 6.
in any plane, are in the vanishing line of that plane.

Let FG be any line in the plane CFG, and EL drawn from the eye at E, parallel to FG, cutting the

Fig. 6. the picture in L. Then since all lines as FG are in the plane CFG, all the parallels EL, are in the parallel plane AEL; and therefore all the points L, are in the intersection AL; that is, in the vanishing line. And it is the same thing whether the plane AC be right or oblique to the plane CG, since the planes CFG and EAL are parallel in all cases.

PROP. IX.

7. *All lines perpendicular to the picture, will be projected into some parts or other of the same lines in the picture; in whatever point of the principal ray, the eye is placed.*

Let FG be a line perpendicular to the picture, E the eye, ES the principal ray; produce GF to cut the picture in N, and draw SN. Then since ES, NG are parallel, they and the line SN are in one plane. Therefore FG appears somewhere in the line SN. Then let the eye remove to K, in the same line ES, and K is still in the same plane ESNG; therefore FG appears still in the line SN, which has not changed its situation. But then the representation of FG does not fall in the same part of the line SN, when the eye is at E, as when it is at K; for the farther the point K recedes back, the less angle the line FG appears under; and the further the representation of it is from S.

Cor. 1. *The further the eye recedes along the principal ray, the less any line appears, which is perpendicular to the picture.*

Cor. 2. *Wherever the eye is taken in the principal ray, the representations of all lines, perpendicular to the picture, will converge to the point of sight. And consequently the picture will appear a regular piece of perspective, to an eye placed any where in that line.*

Cor.

Cor. 3. *Likewise by the same reasoning, the representations of all parallel oblique lines will tend to their accidental point, if the eye recedes in the line drawn thro' that accidental point.* Fig. 7.

Cor. 4. *These things hold true in an inclined picture, substituting lines parallel to the principal ray, instead of lines perp. to the picture.*

PROP. X.

If a light be put in the place of the eye, and the shadows of any objects be projected on a plane parallel to the picture, placed behind the objects; these shadows will form a piece of perspective similar to that made on the picture, when the eye is placed in the point of view; and will have the same appearance.

For the image made by the shadows, is formed by rays drawn from the light thro' all the points of the objects, till they cut the parallel plane. And the image on the picture, is formed by the very same lines cutting the picture. Therefore these two images, upon these parallel planes, must needs be similar; and will appear equal to an eye in the point of view.

Cor. 1. *The images of objects, formed by their shadows, on a plane; will make a regular piece of perspective.*

Cor. 2. *The images formed, by the shadows of the sun's light, make a piece of military perspective.*

For the sun's light may be supposed to come from an infinite distance.

PROP.

Fig.

PROP. XI.

8. *If the back side of the picture* AC *be a plain reflector; and if the eye be placed at* O *in the principal ray* ES, *produced as far beyond the picture. Then the eye looking towards the reflector, will see all objects in the same places of the reflector; as an eye at* E *will see them in the picture.*

Let F be any point of an object, and draw FIG perpendicular to the picture cutting it in I, and make GI = FI; and draw SI from the point of sight S. Then since both EO and FG are perpendicular to the picture, the point F seen by reflection from O, or directly from E will appear somewhere in the plane FEO, and therefore somewhere in the line SI, the section of it with the picture. But (Optics, B. II. Prop. II.) F is seen by reflection in the line GO, and F is seen directly in the line EF. But both these lines intersect at V in the line SI. For the lines GI = FI, and ES = OS, and SI perpendicular to them all. Therefore their intersection must be in the line SI. But in looking towards the reflector, with the back towards the objects; the right side will appear on the left, and the left on the right; being contrary to what they are when the face is turned the contrary way. Now what is proved of the point F, holds of all points of all objects whatever.

Cor. *Tho' all objects and all points of them appear in the same places by reflection as when seen directly, yet the face being turned the contrary way, what is on the right will appear on the left, and what is on the left will appear on the right hand.*

PROP.

Fig.

PROP. XII.

In viewing any piece of perspective of a country, city, &c. the further the eye is placed from it, in the principal ray; the longer the draught appears to be, and that in proportion to the distance of the eye.

I call that the length which is taken along the geometrical plane, as it runs directly from the picture. 9.

Let AC be the picture, EA the principal ray, CV the horizontal plane. Let E be the point of view, for which the prospect was drawn. Then 'tis plain CB represents the length CF, to the eye at E. Let the eye be removed to D, in the principal ray AED; then the same CB represents the length CV. But by similar triangles, CF : AE : : (CB : AB : :) CV : AD; and therefore the apparent length of the draught is greater at D than at E, in proportion of AD to AE.

Cor. 1. *Hence in any given piece of perspective, the further the eye is placed from the picture; the larger and more extended it seems to be; and the nearer, the less it appears.*

Cor. 2. *No perspective view will appear exactly like the original, but when it is seen from the true point of view for which it was made.*

For when it is seen from a point nearer than the true point, it gives too short a view; and if from a point further off, the view is too long. And in no position of the eye but one, can all lines come from the objects to the eye, to cut the picture in the same points. And therefore the situation of all objects will not be the same, when viewed from different points. Whence no view can appear so natural, as when seen from its own point of view.

And

Fig. 9. And then all rays coming to the eye will come in their true directions, and make an appearance exactly similar to the original.

Cor. 3. *Tho' the objects seem greater when the eye is further off, yet they really appear under less angles.*

For in this case the reason of their appearing greater, is not because the several parts of the view appear under greater angles, for they really appear under lesser; but because the view appearing longer, we judge the distance to be greater, and therefore the objects seem greater, and the view more extensive. But this apparent greatness arising merely from judgment, it may be different in different people.

PROP. XIII.

If any print or perspective view, be looked at thro' a lens, whose focal distance is equal to the principal ray, and the print placed in its focus; it will be so magnified, as to have the very same appearance, as the place it was drawn for.

10. Let L be the lens, AC the picture placed in its focus, whose focal distance is LS = the principal ray. Then (Cor. 10. Prop. XX. B. III. Optics), all the rays issuing from the picture AC, in its focus, and refracted by the lens L, will emerge parallel to the eye; therefore they come to the eye as they do from the objects at a great distance; therefore the view is magnified. Also (by Prop. XXXVII. ib.) the apparent magnitude of the view, or any part of it (that is the angle it appears under), seen thro' the lens; is the same as that seen by the naked eye from L, that is from the point of view of the print. But the apparent magnitude of the view or any part of it seen from L, is the same as that of the country itself (or other object) seen from

from L, ſince the ſame lines go to all the correſpondent points. Therefore the angles, the whole and every part of the print is ſeen under, thro' the lens, are the ſame as thoſe of the object or objects ſeen with the naked eye from L. And therefore both muſt neceſſarily have the ſame appearance. Fig. 10.

Cor. *Glaſſes which are not of a due focal length, will not give the exact appearance of a place. Shorter glaſſes make the diſtances leſs, and ſo contract the view. And longer glaſſes make the diſtances greater, and extend the view.*

For by Prop. XII. the further the eye is off, the larger and more extended the draught appears. And when 'tis ſeen thro' a lens of any focal diſtance, it appears equally large, as ſeen at that diſtance with the naked eye. Therefore it follows that a print ſeen thro' a lens of a long focus, appears larger than when ſeen thro' one of a leſſer focus.

SCHOLIUM.

Since glaſſes of a long focal diſtance, give a large and extenſive proſpect of a country, therefore they are better than ſhorter glaſſes. And when the proſpects are well drawn, and properly coloured; it is very delightful to view them thro' a good glaſs, as they ſo nearly imitate nature. And tho' there is but one focal length that will give a true appearance, yet the draught will always appear a regular piece of perſpective, tho' it may not exactly repreſent any place in the world, ſuppoſing the eye placed ſomewhere in the principal ray. And the draught will ſeem longer in proportion to the focal diſtance of the glaſs made uſe of; or in proportion to the apparent diſtance of the neareſt part of the picture.

As there is nothing more pleaſant than viewing the draughts of countries, towns, cities, magnificent

Fig. 10. cent buildings, and other grand objects, when well drawn: to see them to the best advantage, the focal distance of the glass should be just so long, as not to shew the scratches, and coarseness of the engraving; or not much longer; for then the view will be narrow, and the parts too small to be seen so far off. And if it be far off, it will hide the beauties as well as deformities. And to get a proper glass, observe at what distance the scratches disappear to the naked eye, and that is the focal length of the glass. Perspective views should be drawn, so that the point of view be further off, than is generally practised, if you would have the piece to be a true copy of nature. The principal ray should not be less than two foot, and then the draught being looked at thro' a lens of that focal distance, it will appear in perfection, and give a true representation of the place it was drawn for. The view should be so large as to subtend an angle at the lens of about 30 degrees. And it is proper to put the lens in a short square tube; which will confine the sight, and direct it to the perspective draught; which, to compleat its beauty, ought to be coloured with the same colours as the natural objects appear in. For which purpose water colours need only be used, as being sufficient for that purpose.

PROP. XIV.

11. *If* G *be any point in the geometrical plane,* GF *perpendicular to the ground line* DC, S *the point of sight, and* SF, EG *drawn. The representation of* G, *shall be at* P *in the line* SF; *and so placed, that* ES : SP : : GF : FP.

For since GF and ES are parallel, they are both in one plane, which plane cuts the picture in the line SF. And all lines as EG, drawn from E to any point

point of the perpendicular GF, will interſect the picture in the line SF; thus EG interſects it in P, and therefore P is the picture of G. Now the triangles ESP, GFP are ſimilar, for by the parallels, angle SEP = FGP, and the vertical angles at P are equal; therefore GF : FP : : ES : SP. Fig. 11.

Cor. 1. *If* G *be any point in the geometrical plane,* GF *perp. to the ground line, and* SF *drawn, and* EG *to interſect* SF *in* P. *Then* P *the image of* G *will be ſo placed, that the ſum of the principal ray and perpendicular* ES + FG : *to the line* SF : : *as the principal ray* ES : *to* SP *the diſtance of the image* P *from* S: *when the point* G *is beyond the picture. But when* G *is on this ſide the picture, you muſt take* ES — FG.

For ſince ES : SP : : GF : FP, therefore ES + GF : SP + PF (SF) : : ES : SP. And ES — *g*F : S*p* — *p*F (SF) : : ES : S*p*.

Cor. 2. *If the picture* AC *is oblique to the geometrical plane, the ſame proportions will hold good.*

This is evident, becauſe ES and FG will ſtill be parallel, and the triangles ESP, and GFP ſimilar.

Cor. 3. *Hence, if the given point be beyond the picture, its image will be above the ground line; if on the ſame ſide as the eye, it will appear below the ground line.*

PROP. XV.

The length of a line GF *ſtanding upright upon the geometrical plane, is to the length of its image gf in the picture; as the hight of the eye* ER, *to the diſtance of the image of its foot from the horizontal line, gn.* 12.

Let E be the eye, RCB the geometrical plane, ESTNV the horizontal plane. Produce GF and

 its

Fig. 12. its representation *gf*, to cut the horizontal plane at N and *n*, and draw NT parallel to VA. Then since GFN, and *gfn* are parallel, the triangles EGF, E*gf*, as also EGN, E*gn*, are similar, whence FG : *fg* : : EG : E*g* : : GN : *gn* : : ER : *gn*.

Cor. 1. *As the distance of the line from the eye, to the distance of its image from the eye; so the length of the line, to the length of its image.*

For by similar triangles, FG : *fg* : : EG : E*g* : : DN : E*n*.

Cor. 2. *As the distance of the eye from the plane* TNG *(in which the line is), to the distance of the eye from the picture* ES, *so the length of the line* FG, *to the length of its image fg.*

For FG : *fg* : : EN : E*n* : : ET : ES.

Cor. 3. *The same is true on an inclined picture, provided the line* FG *be parallel to the vertical line* SX.

For the triangles EGF, E*gf* will be still similar; as also EGN, and E*gn*.

SCHOLIUM.

This proposition is the foundation of all schenography. By its help all elevations are performed, the positions and hights of all solids truly laid down. And the schenographic representations of all bodies exactly delineated.

PROP. XVI.

If a point be elevated above the geometrical plane, it is the same thing as if it was in a new geometrical plane raised so much higher, as is the hight of that point. The point of distance remaining the same.

13. Let E be the eye, S the point of sight, AC the picture, IHQ the geometrical plane, and GF a line

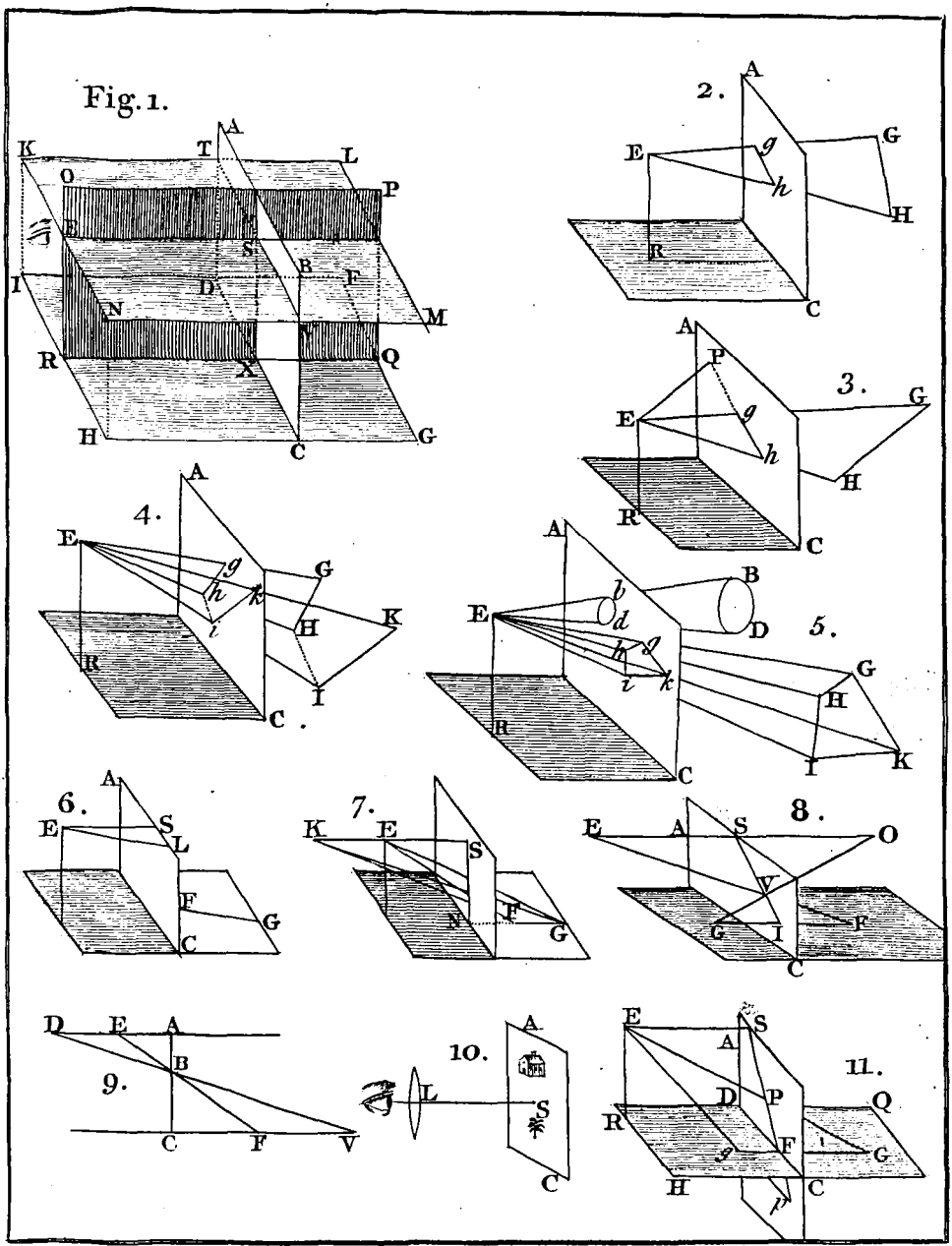
Fig. 1.
2.
3.
4.
5.
6.
7.
8.
9.
10.
11.

line ſtanding perpendicularly upon it. Thro' the top F draw the plane KLMN, which will cut the picture perpendicularly in the line *dfc*, and the hight of the eye in *r*. Therefore if we make this new plane the geometrical plane, the point F will be a point in it. And the hight of the eye will be E*r*, and ground line *dc*. And the hight of the eye, and the picture will be ſhortened by the hight R*r* or FG or *fg*; while the point of diſtance, and principal ray ES remains the ſame. Fig. 13.

Cor. *And thus every point, elevated above, or depreſſed below, a given geometrical plane; may be aſſumed in ſome other geometrical plane, drawn thro' that point, parallel to the firſt.*

PROP. XVII.

If E *be the eye,* AC *the horizontal plane,* ER *the geometrical plane. And if any objects (ſituated in the plane* GR *perpendicular to the horizon) are to be drawn upon the plane* AC, *for the picture. They will appear in the ſame places, as when the hight of the eye, and the diſtance, are changed for one another.* 14.

For let G be a point to be repreſented in the plane SC. Draw the line EG to cut SC in *g*, and *g* will be its place in that plane; where ES is the hight of the eye, and SC its diſtance. But this is the very ſame thing as if ER was the hight of the eye, and ES its diſtance, AC the picture, and RG the geometrical plane, in which the point G is ſituated. This will be evident, by turning the whole figure about, till RG becomes the baſe; for then E being the eye, ER is its hight, ES its diſtance, &c.

Cor. *Hence the ſame rules that ſerve for drawing upon a vertical plane, will alſo ſerve for drawing upon a horizontal one.*

Fig.

PROP. XVIII.

The ſhadow of a right line, upon a plane cauſed by any light, is alſo a right line.

For if a plane be drawn thro' the light, and the given right line, and extended to the plane, it will cut that plane in a right line (Geom. V. 3.); and it is evident this line of ſection is the ſhadow of the given line.

Cor. 1. *If the right line given be parallel to the plane, its ſhadow will be parallel to that line:*
For the line being parallel to the plane will be parallel to the ſection, (Geom. V. 11. Cor.).

Cor. 2. *If the right line go thro' the light, its ſhadow is only a point.*

Cor. 3. *The image of the ſhadow (of a right line upon a plane) will alſo be a right line.*
This is evident by Prop. II. conſidering the ſhadow as an object.

Cor. 4. *If ſeveral parallel lines be parallel to a plane, all their ſhadows will be parallel to one another and to theſe lines.*
This is plain by Geom. V. 8. and Cor. 1. of this.

Cor. 5. *And if the light be at a great diſtance; the ſhadows of any parallel lines, will be parallel to one another.*
For then the planes paſſing thro' theſe lines, and the light may be eſteemed parallel. And therefore (Geom. V. 11.) theſe ſhadows, or their ſections with any other plane, will be parallel.

PROP.

Fig.

PROP. XIX.

The images of all rays, proceeding either from the sun or a small light, tend to the image of that light in the picture.

For the image of the light is the image of one end of any ray proceeding from that light; and the ray being a right line, its image will be a right line, proceeding thro' the image of the light, or tending to it.

Cor. 1. *The image of the shadow of any point, is in the right line drawn thro' the image of that point, and the image of the light.*

Cor. 2. *The images of all bodies are terminated, by lines drawn thro' the image of the light, and thro' the images of the extremes of these bodies.*

PROP. XX.

If a right line FG *be parallel to any plane* PQ; 15.
the image ik *of its shadow* IK *upon that plane, (by any sort of light), shall tend to the accidental point* O, *of that right line.*

For (by Cor. 1. Prop. XVIII.) the line FG and its shadow IK will be parallel; and (Cor. 1. Prop. IV.) the images of these parallel lines FG, IK, tend to the accidental point of FG, that is to O.

Cor. 1. *If a line be perpendicular to the picture, the image of its shadow, upon the geometrical or vertical planes, or their parallels, tends to the point of sight.*

For then the line is parallel to both the geometrical and vertical planes.

Fig. 15. Cor. 2. *If a line be perpendicular to the vertical plane; the image of its ſhadow upon the geometrical plane, or the picture, or their parallels, is parallel to the ground line.*

For then it is parallel both to the geometrical plane, and the picture.

Cor. 3. *If the line be perpendicular to the geometrical plane; the image of its ſhadow upon the picture and vertical plane, and their parallels, is parallel to the vertical line.*

For then the line is parallel to the vertical plane and the picture.

PROP. XXI.

16. *If* L *be the image of the ſun in the picture, which is below the horizontal line* AS, *when the ſun is before the picture; or above it, when beyond. And if* LI, LN, *be drawn parallel to* AS, SX; *cutting the vertical line* SX *in* I, *and the horizontal line* AS *in* N, *and* SL *be drawn. Then if a right line be expoſed to the ſun's light; the image of the ſhadow, which ſuch a line, perpendicular to the picture, or vertical plane, or geometrical plane, or their parallels, caſts upon the ſaid plane, is parallel to* SL, *tends to* I, *or tends to* N, *reſpectively.*

1. The ſhadow of the principal ray ES will be LS. For L is the image of the ſun in the picture, and a line drawn thro' L and the eye at E, paſſes thro' the ſun; and therefore L is the ſhadow of E. But planes drawn from the ſun, thro' all the parallels to ES, will cut the picture AC in parallel lines; becauſe the ſun is at an infinite diſtance, and therefore theſe planes are parallel, and their ſections with the picture, parallel (Geom. V. 11); that is, the ſhadows of the lines perpendicular

lar to AC will be parallel to one another on the picture, and to SL. Fig. 16.

2. If several lines be perpendicular to the vertical plane EPQR; their shadows upon the plane will be parallel to one another, as appears from what is demonstrated just now. But these shadows being taken for objects, their appearances in the picture (by Prop. IV. Cor. 1.) will tend to their accidental point, which is I. For the shadow of a line passing thro' E, parallel to AS, will fall upon LI (Cor. 1. Prop. XVIII.), and that shadow falling on the vertical plane, will be parallel to the other shadows on that plane, and also in the line EI. Therefore EI being parallel to all the shadows, I will be their accidental point.

3. Since L is the shadow of E, the shadow of ER perpendicular to the horizontal plane, will fall in the line GLN. And (Cor. 5. Prop. XVIII.) the shadows of all lines perp. to the geometrical plane will be parallel to RG, which is the shadow of ER. And since EN is parallel to RG, N will be the accidental point of RG, and of all the shadows, upon the geometrical plane. And therefore their representations in the picture tend to N.

And the same is true of the images of the shadows upon any parallel planes; since these shadows are parallel to the former.

Cor. *If the sun is in the plane of the picture, the appearance of the shadow of any line perp. to it, is parallel to a ray of the sun falling on it. If in the plane of the vertical plane, they tend to* I. *If in the horizontal plane, they tend to* N. *And the same for their parallels.*

Fig.

PROP. XXII.

The image of the ſhadow, which a line perpendicular to any plane caſts upon that plane, tends to the image of the point of ſituation of the light upon that plane; that is, to the image of the point where a perpendicular from the light falls upon that plane.

17. Let D be any light, BF a line perpendicular to the plane KH, draw DI perp. to the ſame plane; then I is the point of ſituation of the light upon the plane KH. Then ſince BF, and DI are parallel, they will be in one plane, DBFI; and the ſhadow of BF will be in the ſame plane. But this plane cuts the plane KH in the line IFG. But the image of that line in the picture (by Prop. II.) is alſo a right line *ifg*. Therefore *fg*, which is the image of the ſhadow FG, tends to *i*, which is the image of I, the ſituation of the light.

Cor. 1. *If the ſhadow of a line perp. to a plane, fall on that plane and others parallel to it; the images of the ſeveral parts tend to the accidental point of any part.*

For theſe parts being parallel, their repreſentations (by Cor. 1. Prop. IV.) tend to the accidental point.

Cor. 2. *If many parallel lines ſtand at any inclination upon the plane* KH; *and if* DI *be drawn from the light* D *parallel to theſe lines, cutting the plane in* I. *Then the images of all the ſhadows will tend to the image of* I *in the picture.*

For the plain paſſing thro' DBF will ſtill cut the plane KH in the right line GFI.

PROP.

Fig.

PROP. XXIII.

The properties of an inclined picture ABC *are the same as those of an upright one, in regard to the places, positions, and magnitudes of any points, lines or figures; taking* ER *for the hight of the eye, parallel to the vertical line* SX. *And instead of lines perpendicular to the picture or to the geometrical plane, taking the same lines parallel to* ES *or* SX. 18.

Let NG be a line in the geometrical plane parallel to the ground line XC; *ng* the image of it in the picture. Then the plane ENG, drawn thro' the eye at E, and the line NG which is parallel to the picture, will cut the picture in the line *ng* parallel to NG. And so would it do in the upright table, by Prop. III.

Let GF be a line standing upon the geometrical plane at G, parallel to SX. Then *fg* its image will also be parallel to SX, or perpendicular to CX. And so it is in the upright picture, by Cor. 2. Prop. III.

Draw RG which will meet *fg* at I in the ground line CX. Then by similar triangles, GF : *gf* : : GE : *g*E : : RG : RI : : RE : I*g*; which are the same proportions we have in Prop. XV. for the upright picture. Likewise NG : *ng* : : EG : E*g* : : ER : *g*I; which is the same porportion, as in the upright picture.

So that whether the picture and the lines ER, FG, stand sloping, or upright upon the line CX, at the points R and G; the representations of the lines NG, GF, will fall in the same places of the picture, and be of the same magnitudes in it.

Cor. *Hence if a perpendicular solid, as a prism or cylinder, &c. as* DM, *is to be drawn; before this can be*

Fig. 18. *be done, by the rules for upright pictures, lines must be drawn from the top* D *to the geometrical plane, parallel to* SX, *as* D*m*. *Then by having the length of m*D, *the image of* D *may be found; and then the image of* M, *and the solid compleated.*

SCHOLIUM.

Hitherto I have been laying down such principles as are the foundation of the whole practice of perspective; which being well understood, the reason of the several operations in the practice will easily be shewn and made intelligible.

And tho' objects may be drawn in perspective various ways, either upon a plane perpendicular to the horizon, or parallel to it, or inclined in any given angle; yet since almost all objects stand perpendicular to the horizon, and all views and perspective draughts, are hung against a wall, which is also perpendicular to the horizon. And since the rules for drawing are the most simple and easy, when the picture is in that position. Therefore I have given all the principles in full for that sort of projection. And in order to extend the rules to other kinds, I have given some propositions, shewing how the other sorts may be reduced to this.

Also as it is most natural to look at a draught of any thing directly, rather than obliquely. And all towns, cities, castles, towers, churches, edifices of all sorts, stand in a perpendicular position, this sort must be esteemed the most natural of any, as well as the most ready, familiar, and easy.

And tho' the objects I have been describing, are such as fall below the horizontal line, and beyond the picture. Yet all the propositions are equally true, tho' the objects are never so high; or when they are between the eye and the picture. But to have drawn them so, would have required larger figures and more room.

And

And ſince ſhadows ſerve to diſtinguiſh the different ſides of a body, and to ſhew us what ſides are towards the light, and what from it, and thereby enable us to judge of the poſitions of all the parts of it; and upon this account they give life to a piece of perſpective, and are the chief ornament and beauty thereof. And as this light may either come from the ſun, whoſe rays are to be eſteemed parallel to one another, as coming from an infinite diſtance. Or they may proceed from a ſmall light as a lamp or a candle; and then they diverge from a point near hand. And ſince a perſpective draught is imperfect without ſhadows; therefore I have laid down a few propoſitions, ſhewing the direction and poſitions of the ſhadows of bodies upon all ſorts of planes, by any ſort of light; from whence the method of laying them down in perſpective is eaſily deduced. Fig.

SECT.

Fig.

SECT. II.

The Practical Rules for drawing in PERSPECTIVE.

HAVING in the first section treated of the theory or fundamental principles of perspective; I come now to lay down the rules by which all the operations, in the practical part, are performed. All which are easily deduced and demonstrated from the foregoing theory.

The nature and foundation of drawing in perspective is easily understood, by looking thro' a glass window, and viewing the several objects without, and whilst you keep your eye fixed steady in one place, imagine these objects painted on the glass in the same places they appear in; that is, in the places where the rays coming from the several objects to the eye, meet the glass. For if such pictures of the several objects were actually described upon the window, it would be really a perspective draught. But then it would only be drawn mechanically, without any rules of art. Whereas, by the practical rules, which will be here laid down, the very same draught may be made, without looking at the objects; and that from certain data, such as the distance, position, altitude, &c. of the several objects to be described.

The practical part of perspective is either direct or inverse; the *direct* method is that by which the appearance of any given object is represented in the plane of the picture. And the *inverse* method is that which finds out the object, by having its image given in the picture. In what follows we shall

shall suppose the picture directly opposed to the eye, and by the help of such lines and points, as we have given, we shall find the appearance of any object upon that plane. In what went before concerning the demonstrations, we were obliged to view it sideways; that the eye might see all the intersections of the several lines and planes concerned therein; many of which, in any other posture, would be hid from the eye; so that each of these figures is really itself a piece of perspective. But these principles being established, we shall have no further occasion for it in that position; but suppose it placed directly before the eye, as it is to be seen from the point of view. Fig.

In the direct method, we find first how to place the image of a point in the geometrical plane, in the picture. Then the image of a line in the geometrical plane is found, by finding the images of the extreme points. Then the image of any plain figure is found, by finding the representations of all the sides. Those of curve lines are found, by finding a good number of points, and drawing a curve regularly thro' them. The image of a line perpendicular to the geometrical plane, is easily found by having the point or base given. And then the image of a sloaping line. The image of a solid is had by finding the image of its base, and then erecting perpendiculars at the angles, of a proper hight; and joining the tops of them by right lines.

In general, the images of all lines in the geometrical plane, which are perp. to the ground line, converge to the point of sight. And those that cut it obliquely tend to their accidental point. And the images of all lines parallel to one another, except such as are parallel to the picture, converge to some point or other.

All

Fig. All lines parallel to the ground line, have their representations on the table parallel thereto. And the images of all lines perpendicular to the geometrical plane, are perpendicular to the ground line. All these things will be exemplified particularly in what follows.

PROB. I.

To represent an object by military perspective.

Military or orthographic perspective is the drawing lines thro' all the points of the object perpendicular to the plane of the picture, placed in a proper position; and then connecting all the points by right lines as they are in the object. Here all lines that are not directly exposed to the eye, must be made less than they are, so much as the obliquity is greater. Angles may appear either bigger or lesser than the truth, according to the position of the plane of their sides. All lines that are parallel in the object, must be parallel in the picture. And those perpendicular to the horizon, must be perp. to the ground line.

The practice is easy. Draw any line for the ground line, and the object being placed, or supposed to be placed, in a convenient situation; let fall perpendiculars from every point or angle of it upon the plane of the picture; drawn in obscure lines; all these will be perpendicular to the ground line. Then lines must be drawn from one point to another as they are in the object.

Or thus, Draw the plan or base of the object, and draw from all the angles, the several altitudes of the parts of the object in these places, parallel to one another; and perpendicular to the ground line, all in obscure lines. Then join the tops of these lines, by drawing other lines, as they are in the object, and all lines belonging thereto that are visible;

visible; rubbing out those that are hid from the eye. But strictly such lines as are not directly opposed to the eye must be diminished, according to the sine of the angle of incidence, from the eye. And the angles will be increased or decreased, in consequence of that obliquity. Lastly, the several parts or planes composing the surface of the body, that lie from the eye must be shaded; the more, the more oblique they are. Fig.

Sometimes you must draw the front or profile as well as the plan, to shew the several altitudes.

Examp. 1.

Let OPQRS be a piece of fortification seen in front. ABEF is the plan, where all the lines BA, CD, &c. perpendicular to the ground line BE, are reduced in length in the proportion of *a*B to AB, by reason of the obliquity of the rays, upon the lines AB, CD, in the base. GHIKLMN is the front, where all the lines H*b*, I*i*, &c. are shortened in proportion of the radius to the sine of inclination of the rays upon the lines H*b*, I*i*, &c. in front, or plane GLMN. Then the figure OV*l*RS, being made equal to GHLMN, and the lines OP, V*v*, &c. and RQ, be made equal to BA, CD, &c. and EF; and the lines joining on the several planes be drawn, as P*v*, OV, *l*R, &c. the solid will be formed; which being shaded, gives the true appearance thereof OPQRS, according to this method of drawing. 19.

Ex. 2.

ABCD is a table, seen both in front and profile. Let EC be the ground line, EF a line parallel to the front. MG the length of the table, MF the length contracted by the obliquity of the lines in the front, parallel to the ground line; and MK perp. to MF, is the breadth; and MH the contracted 20.

Fig. 20. tracted breadth, by the obliquity of the lines perp. to the line EF. Make HI = HK, and draw IN parallel to MF, and make ML = MH, and draw FN parallel to ML; then LNFM is the plan. Make the figure OCDP equal and similar to LMFN. And on the points O, C, D, P, raise the perpendiculars OQ, CR, DS, PT, equal to the contracted hights of the table by the obliquities of the lines OQ, CR, &c. Draw a plane ABV, thro' the points Q, R, S, T, whose sides shall be parallel to QR, RS, ST, TQ; and finish your table as in the figure.

SCHOLIUM.

Drawing by this sort of perspective, is no more than drawing the shadows of all the lines of an object, which the sun, (or a light at an infinite distance), casts upon a plane; and then shadowing the parts.

The point of sight in this kind of perspective is any where. For the eye is supposed to project any parts of the object, by lines perpendicular to the picture; which comes to the same thing as viewing them from an infinite distance.

This sort of perspective is the best for drawing small bodies, as things within a house; and particularly all sorts of engines; for standing at a distance, the sides that are parallel in the object, scarce appear otherwise than parallel. And upon account of its easiness, it is an excellent method to learn to draw by, and very proper to be practised by young students that are learning to draw; for by this they acquire a habit of judging of the positions of the several parts of an object, and by that means readily learn to draw by hand. The principal difficulty is to know how much any line, (or any other parallel to it) is contracted in the draught, and to do this, either the angle which the visual ray makes with that line must be given; or it must be found by

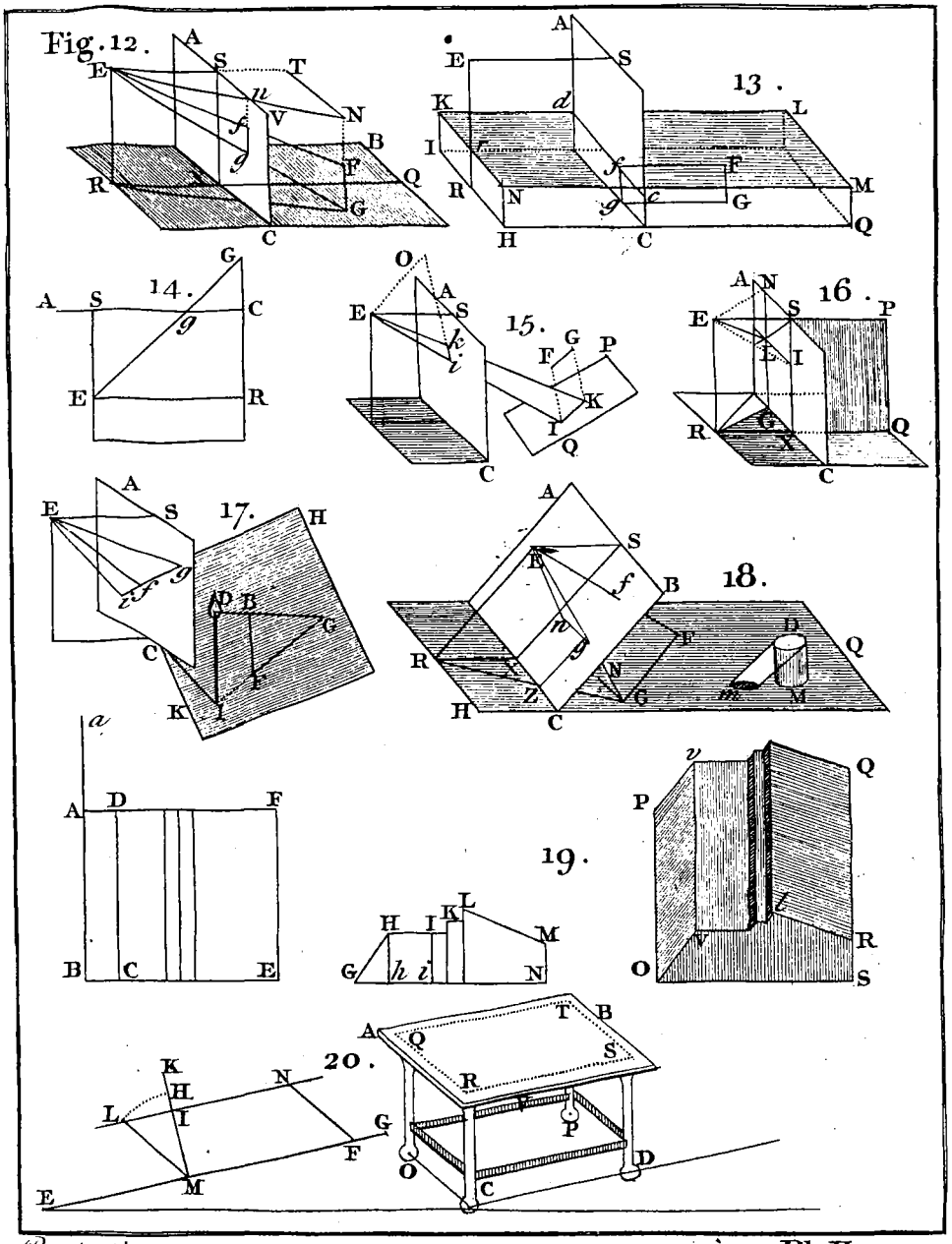
Fig. 12.
13.
14.
15.
16.
17.
18.
19.
20.

by experiment; and these being had, the thing will be easy. But it must be observed, that the method here used of laying down the plan, is not accurate, but only an approximation; and is used only to avoid a more tedious and troublesome construction. And therefore it gives not the angles exactly true. But for such as would be exact in finding the true representation of an angle, I shall lay down the following problem. Fig. 20.

PROB. II.

To find the apparent magnitude of an angle in military perspective.

Let ABCD be the plane, BAD the given angle in that plane. At the point A erect the perpendicular AP, to that plane; thro' AP and the eye (at an infinite distance) draw the plane PAFG, which will be perp. to the given plane AC. Let the angle AGF be the elevation of the eye above that plane, and let AF be perp. to FG. Then thro' AF and FG draw the two planes AFE, and FGBE, both perp. to AFG; then since the three planes AFE, AGB, FGB, are all perp. to the plane AFG, their intersections will be all perp. to AFG, and consequently parallel to one another; and therefore FE parallel to GB. Therefore if a ray passing thro' F fall upon G, another ray parallel to it falling on B will pass thro' E making FE = GB. Therefore it is evident, the angle BAG in the plane ABCD, is projected into the angle EAF in the perpendicular plane EAF. And the angle BAG is the declination of the plane AFG (or of the eye) from the side BA. Therefore in the triangle AFG, rad : s.AGF : : AG : AF $= \frac{AG}{rad} \times$ S.AGF, and in the tri- 21.

Fig. 21. triangle AGB, rad : tan. GAB : : AG : GB $= \frac{AG}{rad} \times t.GAB$; therefore in the triangle AFE, rad : tan. FAE : : AF : FE or GB : : $\frac{AG}{rad} \times$ S.AGF : $\frac{AG}{rad} \times t.GAB$: : S.AGF : tan. GAB.

Cor. 1. *Hence, as ſine of elevation of the eye* AGF *above the plane* ABCD : *radius* : : *tan. declination* BAG *of the eye or vertical plane from the ſide* BA : *tan. of the apparent angle* FAE, *from the ſame vertical plane* AFG.

Cor. 2. *After the ſame manner that the angle* FAE *is found for the repreſentation of the angle* GAB *on one ſide of the vertical plane* AFG; *the repreſentation of the angle* GAD *on the other ſide, is found; and conſequently the whole angle* BAD.

PROB. III.

Any figure or figures being given in the geometrical plane, to lay them down in a proper ſituation for drawing them in perſpective.

22. Let AB be the ground line, CDEF the given figure. From every point of the figure, C, D, E, F, draw perpendiculars to the ground line CG, DH, F*f*, EK, and continue them till G*c* = GC, H*d* = HD, I*f* = IF, and K*e* = KE. Then draw *cd*, *de*, *ef* and *fc*. And the figure *cdef* is in a proper ſituation for drawing.

For if the figure CDEF was to remain in its proper place, the projection of it in the picture would interfere with the figure itſelf, and one of them would confound another. Therefore the original

ginal is transferred to the other side of the ground line in an inverted position, as if the whole figure was turned upside down over the line AB into the position *cdef*. And this is just as it would appear by reflexion in a looking-glass; and therefore the inverted figure, will by reflexion show the true figure. And as the distances of the several points *c*, *d*, *e*, *f* are the same as of the points C, D, E, F, and in the same perpendiculars to the ground line; therefore they answer exactly the same ends, whether the true or inverted figure is made use of. Fig. 22.

SCHOLIUM.

Hence in what follows, all figures placed in the geometrical plane, are supposed to be transposed to the other side of the ground line, at the same distance, and there drawn in an inverted position. But it is not always necessary that the figures be actually drawn; it is sufficient in many cases, to have only the distances of their several points from the ground line, and the points where the perpendiculars cut it. For by having these things, all the operations may be performed as well as if the figures were drawn.

PROB. IV.

To find the vanishing line of any plane, whose intersection and inclination to the picture are given.

Let S be the point of sight, PQ the intersection of the plane with the picture. Draw RSP perpendicular to PQ, and SE parallel to it, and equal to the principal ray. Make the angle SER equal to the compliment of the angle, which the given plane makes with the picture, intersecting RP in R; draw RV parallel to PQ, for the vanishing line of the plane. 23.

Fig. 23. The vanishing line is the intersection of the picture, and a plane passing thro' the eye parallel to the given plane. Just as the intersection of the picture and the horizontal plane, is the vanishing line of the geometrical plane.

For suppose the plane RES to be raised up perpendicular to the plane of the picture. Then as E is the eye, and RV parallel to PQ; a plane passing thro' ERV, will then be parallel to the plane passing thro' PQ; and inclined to the picture in the angle ERS. Therefore RV is the vanishing line sought.

PROB. V.

24. *To find the accidental point of a right line; having given its elevation on the geometrical plane, and the angle its base makes with the ground line.*

I call that its base, which is a line drawn from the point where it intersects the geometrical plane, to the point where a perpendicular intersects the geometrical plane, which is drawn from the top of it.

Let S be the point of sight, SP the horizontal line, XQ the ground line. Then as it is all one where the line stands, if it be but in a parallel position; therefore suppose it cuts the geometrical plane at X. Make the angle BXC the declination of the base, or the angle it makes with the ground line, and DXF its elevation above the plane; which here is towards the eye. Let SE, equal to the principal ray, be perp. to SP, and make the angle SEP = BXC the declination; thro' P, draw PQ parallel to the vertical line SX. Then make PG = PE, and the angle PGR = DXF the depression, here below the geometrical plane; and R is the accidental point.

For

For imagine the plane ESP to be raised up till it be perpendicular to the plane of the picture SXQP, then the angle SEP being equal to BXC, the plane passing thro' EPQ will be parallel to the plane in which the given line is, whose base is XC; therefore PQ is the vanishing line of that plane. Then since PG or PE is the distance of the line PQ from E; and the angle PGR being equal to DXF, therefore ER must be parallel to DX (supposing ER to be right over S, as was said before); and therefore R is the accidental point of DX, or of the given line, which is parallel to it, by Prop. VIII. Fig. 24.

It is easy to know, from the position of the given line, whether the angle SEP is to be taken to the right or to the left; and whether the angle PGR is to be taken upwards or downwards.

Cor. 1. *If the given line have no declination, its accidental point is in the vertical line* SX.

Cor. 2. *If the given line be parallel to the geometrical plane; its accidental point is in the horizontal line* SP.

Cor. 3. *Two lines proceeding from one point, make the same angle, as two lines drawn, from the eye to their accidental points do.*

PROB. VI.

A point in the geometrical plane being given; to find its appearance in the picture.

1. Let AB be the ground line, DD the horizontal line, S the point of sight; D, D, the points of distance. And let C be the point given, transposed to the other side of the ground line. Draw CF perpendicular to AB; make FG = FC, draw FS, then draw GD to the opposite point of 25.

Fig. 25. diſtance D, if the original point is beyond the picture, to cut SF in *c*, then *c* is the image of C in the picture.

But if the original point be on this ſide the picture, you muſt draw a line from G to the point of ſight on the ſame ſide; and then the interſection with SF, gives the image of C below the ground line.

For the triangles D*c*S and F*c*G are ſimilar, whence DS : S*c* : : FG : F*c*. But (by Prop. XIV.) the image of C is in the right line SF, and ſo placed, that the principal ray : S*c* : : diſtance of the point : F*c*. But DS is equal to the principal ray (by Def. XVI), and FG is equal to FC the diſtance of the point. Therefore *c* is the image of C.

2. *Otherways thus.*

Set off the diſtance FC both ways from F to G and A, and draw from A and G, two lines to the oppoſite points of diſtance D, D; and their interſection *c* is the place of the image, if C is beyond the picture. Otherwiſe draw lines to the points of diſtance on the ſame ſide.

For ſince AF = FG, and DS = SD, therefore DG and DA interſect SF in the ſame point *c*, and conſequently they interſect one another in the very ſame point.

3. *Or thus.*

When the diſtance of the eye, or the diſtance of the point, is very great, or when the point D or the point G, falls without the picture. Take any aliquot part of SD from S, and the ſame part of FC or FG from F; and from theſe points draw a line to interſect SF, which interſection will ſtill fall upon the ſame point *c*, becauſe ſimilar parts are proportional to the wholes.

4. *Other-*

Fig.

4. *Otherwise.*

Let SD be the horizontal line, AB the ground line, S the point of sight, C the given point transposed. Draw SE perpendicular to SD, and equal to the principal ray; and draw FC perp. to AB. Draw SF, and EC to intersect it in *c*, the image sought. If the given point be on this side the picture, FC must be taken upwards. 26.

For the triangle ES*c*, and CF*c* are similar, whence SE : S*c* : : CF : F*c*. Therefore (Prop. XIV.) *c*, in the line SF is the image of C. Hence also, SE : E*c* : : CF : C*c*.

5. *Otherwise thus.*

Let SD be the horizontal line, S the point of sight, AB the ground line, C the given point transposed. Draw SE perpendicular to SD, and equal to the principal ray. Draw the line EC, then draw any line CB and EL parallel to it, draw LB to intersect EC in *c*, the image of C. 27.

If the given point be on this side the picture, draw FC upwards.

For draw CF perpendicular to AB. Then by the similar triangles ESL, CFB, and E*c*L, CB*c*; we have, ES : CF : : EL : CB : : E*c* : C*c* : which comes to the same thing as the 4th method.

6. *Or thus.*

From the point C transposed, draw two lines CB, CG, to the ground line AB; and two lines EL, ED parallel to them, from the eye at E, to the horizontal line LD. Draw LB, DG to intersect in *c*, which will be the image of C.

For by the similar triangles, the lines LB, EC intersect one another in the same point, in which DG, EC intersect. And therefore LB, DG intersect in the same point.

Fig.

7. *Otherwise.*

28. Let SD be the horizontal line, S the point of sight, AB the ground line, C the given point transposed, CF its perpendicular. Draw from any point D, two lines DB, DG, making any angle; make DG = principal ray, and EG = CF; draw GB, and EK parallel to it, and KC parallel to AB, cutting SF in *c*, the representation of C.

For by the parallels, DE : EG : : DK : KB : : S*c* : *c*F, according to Prop. XIV. therefore *c* is the image of C.

Cor. 1. *From hence the accidental point of any right line may be found as follows.*

29. Let DE be the horizontal line, S the point of sight, AB the ground line; then since the position of the line is given, its intersection with the geometrical plane, and also with the picture, is given. Let P be the point in the geometrical plane transposed, and I that in the picture. Find the appearance of P in the picture as at *p*. And thro' I, *p*, draw EI*p*F. Make *as* the distance of the foot of the line from the picture, PC : to the principal ray DS : : So is *p*I : to *p*K; and K is the accidental point of the given line.

30. For let PI be the given line, and let *p* be the appearance of P, in the picture; thro' *p* and I, and the eye at D, draw the plane DIP*p*, in this plane draw DK parallel to PI, then it is evident (Def. XVII.) K is the accidental point of PI. But the triangles P*p*I and D*p*K are similar, whence *p*K : *p*I : : D*p* : *p*P. Let the plane DIPK revolve about the line DP, till it coincide with DS, then the plane DSCP is perp. to the picture, and PC perp. to the ground line; and the triangles D*p*S and P*p*C are similar, whence D*p* : *p*P : : DS : PC. Therefore *p*K : *p*I : : DS : PC.

Cor.

Cor. 2. *Let* Ip *interſect the horizontal line in* E, *and the ground line in* F. *Then if* pF : pE : : pI : pK, K *will be the accidental point of* PI. Fig. 30.

For the triangles S*p*E, C*p*F are ſimilar, therefore DS : PC : : S*p* : *p*C : : E*p* : *p*F, and (Cor. 1.) DS : PC : : *p*K : *p*I; whence *p*E : *p*F : : *p*K : *p*I.

Scholium.

To avoid confuſion with many lines, if two threads be fixt at the points of ſight and diſtance, and be extended to the diviſions of the ground line, their interſection will give the points in the picture. It may be ſufficient only to apply the threads.

PROB. VII.

Any right line in the geometrical plane being given; to find its appearance in the picture.

Find the image of one end of the given line (by the laſt Prob.) and in like manner find the image of the other end of it. Then a right line drawn from one of theſe images or points to the other, will be the image of the given line.

Ex. 1.

Let FG be the given line tranſpoſed; find the image of F at *f*, and the image of G at *g*; then draw *fg*, which is the repreſentation of FG. 31.

Ex. 2.

Let the given line FG be parallel to the ground line PQ, draw FP, GQ perpendicular to the ground line. Then find the image of F at *f*, and of G at *g*. And draw the line *fg* for the image of FG. 32.

Or ſhorter thus, draw SP and SQ, and having found the point *f* as before, draw *fg* parallel to PQ,

to

Fig. 32. to cut SQ in *g*. Then draw *fg* for the image of FG. For (by Prop. III.) the image *fg* will be parallel to FG or to PQ. And (by Prop. XIV.) it will be terminated in the line SQ.

PROB. VIII.

A right lined figure in the geometrical plane being given; to find its representation in the picture.

Find the appearances of all the angular points thereof in the picture (by Prop. VI.) and draw lines from one to another, as in the original.

Or find the appearances of all the lines that compose it, one after another (by Prop. VII.) and that will give the image of the whole figure.

And here all lines, perpendicular to the ground line, must have their images drawn to the point of sight; and all lines parallel to the picture, will have their representations parallel. By this means several short methods of working, especially in regular figures, will appear of themselves.

Ex. 1.

33. Let NOPR be a square, whose side NR is parallel to the ground line AB. DE the horizontal line, S the point of sight. Make CF = CN, and CA = CO. OC and PI being perp. to AB. From S draw SC, SI, and FE to intersect it in *n* and *p*; draw *nr*, *op* parallel to AB, and *nopr* is the image or representation of the square NOPR.

For since CN = CF, *n* is the image of N; and CA being = CO = IP = IF, therefore *p* is the image of P, and therefore *nopr* is the image of NOPR.

Ex. 2.

34. Let LMNOP be a regular pentagon, DE the horizontal line, S the point of sight, AB the ground line.

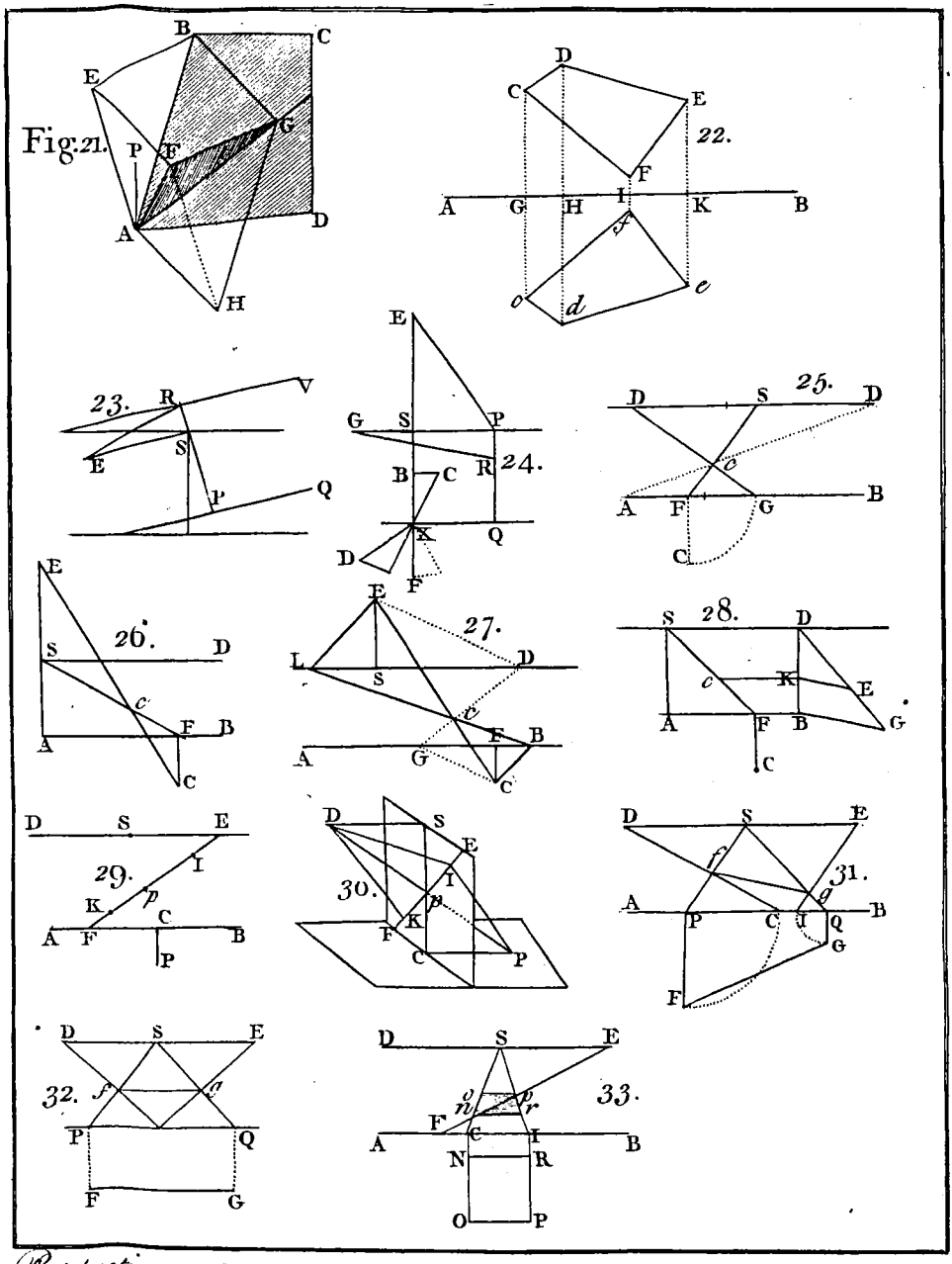
Fig. 21.
22.
23.
24.
25.
26.
27.
28.
29.
30.
31.
32.
33.

line. From the ſeveral angles L, P, O, N, M, let fall perpendiculars upon the ground line, L*f*, P*g*, M*h*, O*i*, and N*k*. To the point of ſight S draw the lines *f*S, *g*S, *h*S, *i*S, *k*S. Make *f*1 = *f*L, and draw 1D, to the point of ſight D, cutting *f*S in *l*, the image of L. Make *g*2 = *g*P, and draw 2D cutting *g*S in *p*, for the image of P. Make *h*B = *h*M, and draw BD, cutting *h*S in *m*, for the image of M. Make *k*3 = *k*N, and draw 3E, cutting *k*S in *n*, the image of N. Make *i*4 = *i*O, and draw 4E, cutting *i*S in *o*, the image of O. Then draw the lines *op*, *pl*, *lm*, *mn*, *no*, which makes the image of the pentagon, required. Fig. 34.

Ex. 3.

Suppoſe the two ſquares O, P, ſeen corner wiſe, are to be drawn, joining upon the ground line AB. S is the point of ſight, D one point of diſtance. From all the angles of the ſquares let fall perpendiculars upon the ground line AB; from the points of interſection draw lines to the point of ſight S. Make A*t* = *tt*, and from the points A, *t*, *t* draw lines to the point of diſtance D, to interſect the former; the firſt in *i*, *k*; the ſecond in *l*, *m*, the third in *n*. Then *iklt*, and *lmnt* are the images of O and P. 35.

Shorter thus. Since the ſides of the ſquares make half a right angle with the ground line; their repreſentations will tend to the points of diſtance, on each ſide. Therefore from the angular points *t*, *t*, draw lines to the point of ſight D, and alſo to the point of ſight on the other ſide; theſe lines by their interſections will give the angles of the ſquares at *i*, *k*, *l*, *m*, *n*.

Or thus. Draw *t*S, *r*S, *t*S, and draw *t*D to interſect theſe in *l*, *m*. Thro' *l*, *m*, draw parallels, *nli*, *mk*, to the ground line AB; and making *li* = *ln*; this gives the angles *i*, *k*, *l*, *m*, *n*.

The

Fig. 35. The reason of these operations, is evident; for $tM = tt$, and $tK = tA$, and $rL = rt$, &c. Also since the lines ILN, and KM, are parallel to AB; *iln*, and *km* will also be parallel to AB.

Ex. 4.

To draw a floor of squares seen fore right.

36. This may be done either with or without a geometrical plan. Let ABGH be part of the plan, where the ground line AB is divided into the equal parts A*f*, *fg*, *gh*, &c. equal to the sides of the small squares. To the point of sight S, draw AS, *f*S, *g*S, *h*S, &c. to BS. Then from A draw to the opposite point of distance, the line AE, which will cut the lines *f*S, *g*S, *h*S, &c. in several points, 1, 2, 3, thro' which, as many parallels must be drawn to the ground line AB; the last whereof is CF; in which all the divisions are equal between C and F, and the same equal divisions may be continued from C to K, and from F to I. And from these points of division other lines may be drawn from S, which upon the line AE (going thro' the point of distance E) give other points, thro' which more parallels to the ground line are to pass, and thus the whole space ABIK may be filled with squares. And if more be desired, draw from the point K to the opposite point of distance E, the line KE, which will cut all the lines drawn from S, in as many points, thro' which new parallels must be drawn to the ground line AB, which last is LN, passing thro' the point L, at the intersection of SB, KE.

For since $fA = fi$, the point 1 represents *i*, and *g*A being equal to *g*K, 2 represents *k*; and as *h*A $= hl$, 3 represents *l*, and so on. And the sides of the squares being parallel to AB, their representations in the picture, passing thro' 1, 2, 3, &c. will be parallel to AB, by Cor. 1. Prop. III.

If

If a line be drawn from *f* or *g* or *h*, &c. to E; that line will pass thro' all the angles of the squares, as well as the line AE, which passes thro' the angles 1, 2, 3, &c. For such a line cuts the lines drawn from S to the several divisions of AB, in the angular points. As AE passes thro' all the angular points; therefore 1E or 2E or 3E (which are parts of the same line) also passes thro' all the angular points. Therefore a line passing thro' any division in the first parallel, or thro' any division in the second, or in the third, &c. will also pass thro' all the angular points. And therefore a line drawn thro' F and E, or thro' C and E, or thro' K and E, will also pass thro' all the angular points of the squares. Fig. 36.

Ex. 5.

To draw a floor of squares seen cornerwise.

This also may be done either with or without a geometrical plane. Let ABGH be a part of a square seen fore right, which contains the little squares. Here AB is divided into equal parts by the diagonals of the small squares. Let AB be the ground line. DE the horizontal line, D and E the points of distance, S the point of sight. Draw AS and BS to the point of sight, and from all the points of division in AB, draw lines to D and E the two points of distance, of which the extreme rays AE, BD, will cut the former in C and F; draw CF. Then ABFC is the image of a square which contains all the little squares; and the other lines drawn to D and E, will by their intersections form the images of the small squares, seen angle wise. And to fill up the whole, divide CF into the same number of equal parts as AB is divided into; and draw lines from D and E thro' all the points of division, which will form the remaining squares. 37.

For

Fig. 37. For ſince the ſides of the ſmall ſquares, lying on the geometrical plane make half a right angle with the ground line, their appearances in the picture will tend to the points of diſtance, as their accidental points, by Cor 3. Prop. IV. And ſince AB is divided into equal parts by lines drawn from D or E; therefore all lines parallel to AB, and paſſing thro' the angular points, of the ſquares, will be divided into equal parts by the ſame lines; and therefore EF is divided equally, by the lines drawn from D and E; to the equal diviſions in AB continued.

Ex. 6.

To repreſent a floor of equilateral triangles.

38. Let AB be the ground line, DE the horizontal line, S the point of ſight; D, E, the points of diſtance. Upon the horizontal line DE, make an equilateral triangle PIQ; ſo that SP and SQ may each of them be half the ſide of the triangle. To the point of ſight S, draw AS, BS. And from A and B draw to the points of diſtance E and D, the lines AE and BD, interſecting the former in C and F. Then ACFB is a ſquare in which the equilateral triangles are to be repreſented. Let ABGH be part of the ſquare upon the geometrical plane. AB being divided into equal parts, each equal to the ſides of the triangles; from all the points of diviſion, draw lines to the point P, and from the ſame points of diviſion, draw lines to the point Q, and thro' the points of meeting draw lines parallel to AB. All theſe lines by their interſections with the former, will make the repreſentations of the triangles in the picture, as required. And to fill up the ſquare, divide CF into the ſame number of equal parts, as AB is divided into; then drawing lines from P and from Q thro' all the points of diviſion; the ſquare ABFC will be filled up with equilateral triangles.

For

Fig. 34.

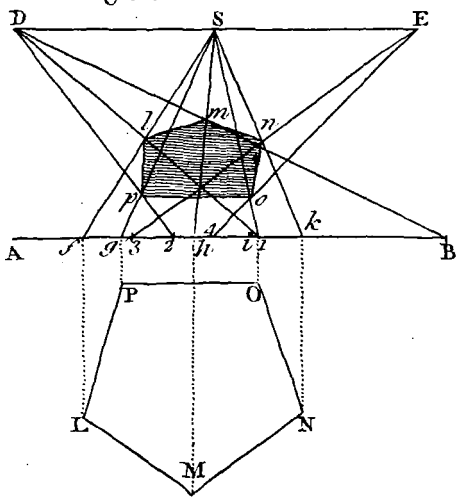

36.

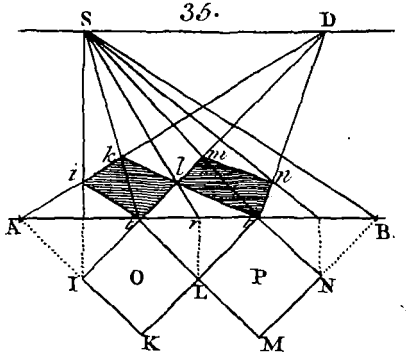

36.

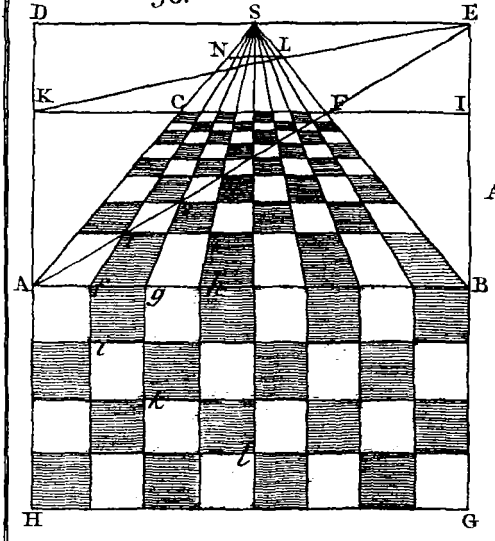

37.

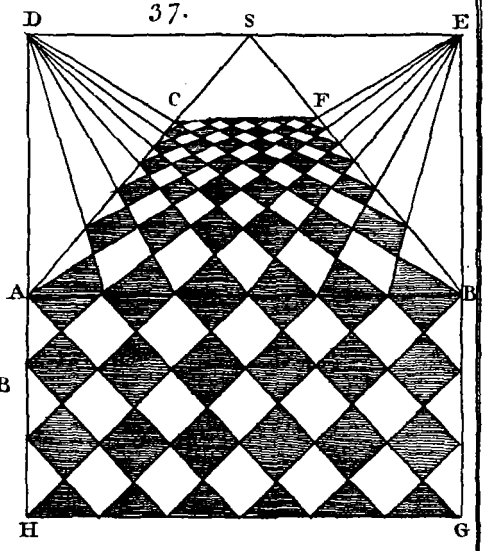

For the figures in the geometrical ſquare ABGH, are terminated by continued right lines which interſect the ground line in an angle of 60 degrees. And IP and IQ alſo making an angle of 60 degrees with the horizontal line DE; therefore P and Q will be the accidental points of the lines AH, BG, and all others parallel to them; conſequently (by Prop. IV.) the appearances of all theſe lines tend to the points P and Q. And ſuch lines as GH in the geometrical plane, being parallel to the ground line AB, their repreſentations in the picture as CF will be parallel to AB (by Cor. 1. Prop. III). Alſo (by Cor. 2. Prop. V.) the diviſions of CF will be equal; and therefore lines drawn from P and Q, thro' theſe equal diviſions, will terminate the remaining triangles, and fill up the ſquare ABFC. And if CF was continued and divided into the ſame equal parts, and lines drawn from P and Q thro' the ſeveral diviſions, theſe lines would form more triangles, and ſo as much ſpace as you pleaſe may be filled with theſe triangles. Fig. 38.

Ex. 7.

To repreſent in perſpective a floor of regular hexagons.

Divide the ground line AB into as many equal parts as you will, and deſcribe a floor of equilateral triangles, as in the laſt example, all in obſcure lines. Then join every 6 triangles together, meeting in the center with all the angular points, and draw lines round them, which will form a hexagon. ABGH is part of the floor drawn upon the geometrical plane. ABCF is the perſpective ſquare, formed by drawing AS, BS to the point of ſight S; and then drawing AE and BD, to the points of diſtance D and E, to cut AS, BS in C and F. All the ſides of the hexagons tend either to the point P or Q; or elſe are parallel to the ground line AB; 39.

Fig. 39. AB; for each of them is the side of some equilateral triangle, all which is evident by the figure. When the hexagons are all finished in the picture, the superfluous lines may be rubbed out.

PROB. IX.

To draw any given curve line in perspective, which is situated in the geometrical plane.

Find the images of a sufficient number of points thereof, (by Prob. VI.) and then join them neatly by hand; that is, by drawing a curve line regularly thro' them, making no angles; and the more points are assumed, the more exact the work will be.

Ex. 1.

40. Let CGK be any curve, DE the horizontal line, S the point of sight, D, E the points of distance, AB the ground line. Take the points C, F, G, H, I, Z, K of the curve, and let fall the perpendiculars CL, FM, GN, HO, KIP, ZQ. Make L1 = LC, and draw 1D and LS to intersect in *c* the image of C. Make MP = MF, and draw PD and MS to intersect in *f*, the image of F. Make NP = NG, and draw NS and PD to intersect in *g*, the image of G. In like manner make OP = OH, PB = PK, PQ = PI, and QB = QZ. And draw PD, OS intersecting in *h*; and draw BD, QD intersecting PS in *k* and *i*, and lastly draw QS intersecting BD in *z*. Then *cfghizk* is the representation of the given curve.

Ex. 2.

41. Let FNO be a circle, AB the ground line, DC the horizontal line, S the point of sight. Draw SE perpendicular to DC, and equal to the principal ray. Draw any number of parallels as FNG thro' the

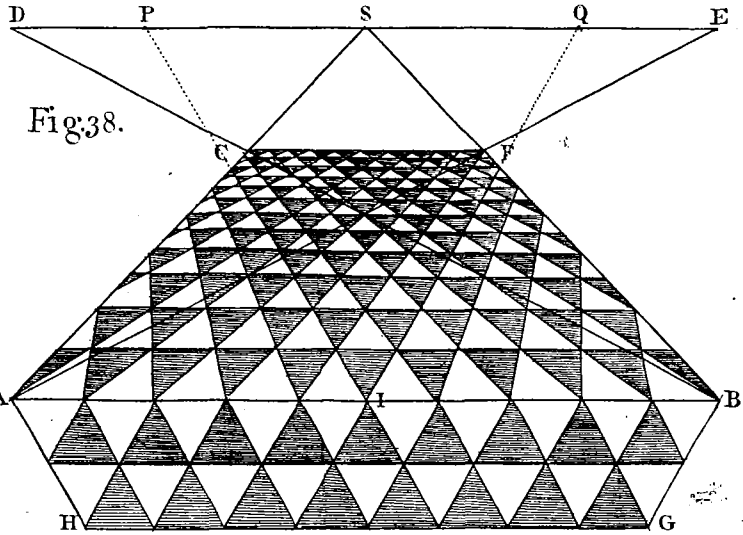

Fig:38.

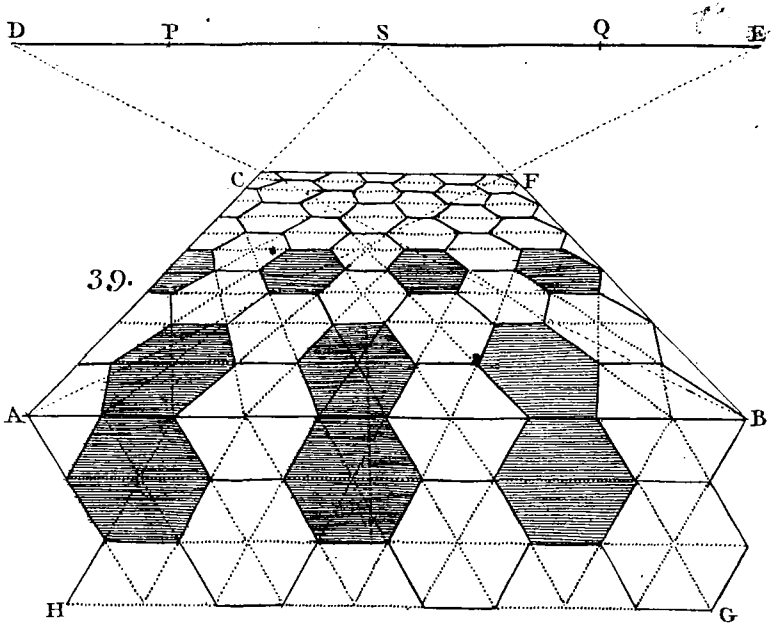

39.

the circle to cut the ground line, as at G, and from E draw EC parallel thereto, cutting the horizontal line in C. Then to find the image of any point F, draw EF, and CG intersecting one another in *f*, which is the image of F. In like manner EN being drawn will intersect CG in *n*, the image of N. And thus EO will intersect CI in O, which is the image of O. And so of the rest. Fig. 41.

For since EC is parallel to FG, C is the accidental point of FG, and all its parallels. Therefore (Prop. IV.) the images of all these parallels tend to C; therefore (by Prob. VI. Method 5); the image of F will be found at *f*, at the intersection of EF and CG. And the like for the rest of the points.

Otherwise for a Circle.

Let DS be the horizontal line, S the point of sight, D one point of distance, AB the ground line. FKH a circle, C the center. Draw the diameter FH perpendicular to AB, and as many lines as you will parallel to FH, as GL, &c. Then find the image of the diameter FH, which is *fh*; and of all the points G, L, K, &c. as *g*, *l*, *k*, as usual; and thro' *l*, *k*, *g*, &c. draw lines parallel to AB, and continued to 1, 2, 3, so that the diameter *hf*, may bissect the lines *l*1, *k*2, *g*3, &c. Then will 1, 2, 3, &c. be in the curve, which must be drawn by hand thro' all these points. 42.

SCHOLIUM.

The appearance of a circle will sometimes be a circle, when it is seen foreright; and to find when this will happen, make the height of the eye a mean proportional, between the two parts of the line of station, taken upon the geometrical plane from the eye's perpendicular, to the nearest and furthest points of the original circle. For let AB be the geometrical plane, LB the diameter of the

Fig. 43. circle ſeen foreright, E the eye, EA the eye's perpendicular, ES the principal ray, SH the picture, and FG the image of the circle LB; and that this may be a circle, the cone ELB muſt be cut in ſubcontrary poſition, by the planes AB and SH; that is, the angle ABE muſt be equal to the angle EGF. Draw CL parallel to SH. Then the triangles ABE and AEL are ſimilar; for the angle ABE = EGF = AEL, and the angle at A is common; therefore AB : AE : : AE : AL, and AE is a mean proportional between AB and AL.

PROB. X.

To draw any figure in perſpective, by help of a floor of ſquares; called the Method of Reticulation.

44. Let AB be the ground line, DE the horizontal line, D and E the points of diſtance, S the point of ſight. Make the ſquare ABGH upon the ground line AB, in the geometrical plane, and divide the ſide AB into as many equal parts as you pleaſe, and ſet off the ſame on BG; thro' theſe diviſions draw lines parallel to the ſides of the great ſquare, which will divide it into little ſquares or cells. Then deſcribe the given figure or figures in their true poſition, in the great ſquare ABGH. This done, draw the ſquare ABGH in perſpective, with all the ſmall ſquares within it, by Ex. 4. Prob. VIII. Then deſcribe each part of the object in ſuch a ſquare or cell of the picture, as you ſee it deſcribed in the correſpondent ſmall ſquare in the geometrical plane; and draw the lines in a like ſituation in one as you find them in the other. And thus by going thro' all the parts ſucceſſively, the whole object or objects will be deſcribed. This method by network is very uſeful, for putting any irregular plane figures in perſpective, conſiſting of many parts; which

which would require a deal of time, and the draw- Fig.
ing of a great many lines, the common way. 44.

Examp.

Let IKLMN be a piece of fortification. The part I is ſituated between the ſecond and third ſquare from B, in the firſt croſs row, therefore its image *i* muſt be ſituated between the ſecond and third ſquare of the picture in the firſt croſs row. The part K lies on the ſide of the third ſquare from AB, and of the ſecond from AH; and *k* its image likewiſe lies on the ſide of the third ſquare from AB, and of the ſecond from AC. L lies in the third cell from AH, and ſecond from HG And its correſpondent *l* lies in the third cell from AC, and the ſecond from CF. M runs into the corner ſquare at G; and *m* runs into the corner ſquare at F. N joins upon the ſide BG, in the third ſquare from B; and *n* joins upon the ſide BF, in the third ſquare from B And the like for all other parts of it, as the center, &c.

PROB. XI.

To find the image of a right line perpendicular to the geometrical plane, at a given point.

1. Let AB be the ground line, DE the horizon- 45.
tal line, S the point of ſight, D and E the points of diſtance. And let P be the image of the given point. Thro' the point P, draw any line KI, cutting the horizontal line in K, and the ground line in I; make IH = the length of the perpendicular given, and draw HK. Draw PQ parallel to the ground line AB, cutting KH in Q; draw PG perpendicular to AB and equal to PQ; then PG is the repreſentation of the given perpendicular.

For (by Cor. 2. Prop. III.) the image GP will be perpendicular to AB. Thro' P draw ML per-

Fig. 45. pendicular to AB, then by Prop. XV. as length of the perpendicular HI : to length of its image : : height of the eye ML : diſtance MP : : (ſimilar triangles) KI : KP : : HI : QP; therefore QP, or its equal PG, is the image of that perpendicular.

2. *Or thus.*

Let RV be the diſtance of the perpendicular from the picture, make VO = VR, and VN = given length of the perpendicular; and draw VS, NS to the point of ſight, alſo draw ND to the oppoſite point of diſtance, to cut SV in 1; and drawing 12 parallel to AB cutting NS in 2, then 12 ſet from P in the perpendicular PM to G; gives PG, for the image of the given perpendicular.

For it is evident by the proceſs, that 1 is the image of R, or of the foot of the perpendicular in the geometrical plane. And therefore 1 and P are equidiſtant from AB. And ſince VN = HI, therefore 12 = QP = PG.

3. *Or thus.*

Draw EB perpendicular to AB, from any point E; in which ſet off BT equal to the given length of the perpendicular. And from any point C in the horizontal line DE, draw CB, CT. From P the image of the foot of the perpendicular, draw PX parallel to AB, and XZ parallel to BT; and laſtly ZG parallel to AB; and PG, in the perpendicular PM, is the image of the given perpendicular.

For HI : QP : : KI : KP : : CB : CX : : BT or HI : XZ. Therefore XZ = EP as required.

Cor. *Hence the image of a right line ſtanding obliquely upon the geometrical plain may be found; by letting fall a perpendicular from the top, and finding its*

Fig. 40.

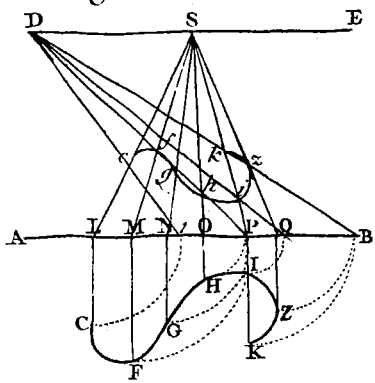

41.

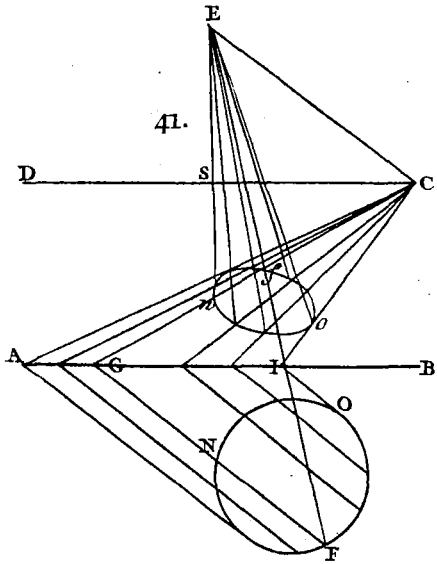

42.

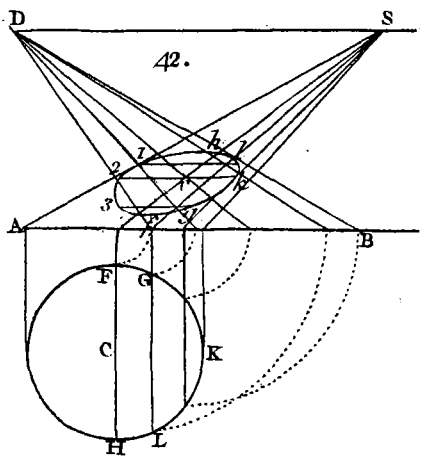

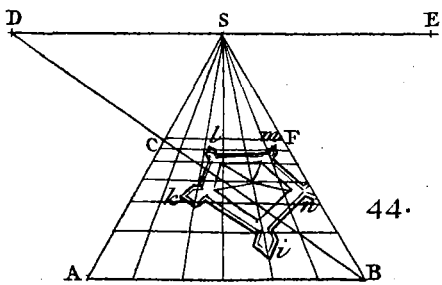

44.

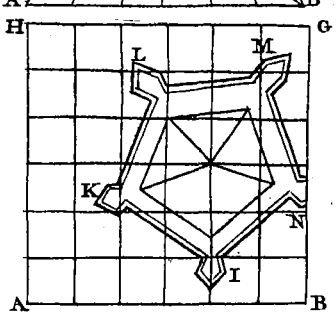

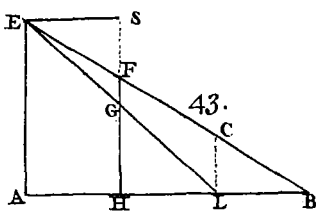

43.

its appearance, and also the appearance of the foot of the line itself. Fig. 45.

PROB. XII.

To make a scale to set off the representations of all equal altitudes.

Let AB be the ground line, DE the horizontal line. Draw BE perpendicular to AB, and set off BT equal to the original height on the geometrical plane; and from any point V, in the horizontal line, draw VB, VT. And from any point F required, draw FG parallel to BT, and FG is the apparent altitude. And thus all lines parallel to BT as FG, *fg*, &c. will represent equal altitudes at the points F, *f*, &c. 46.

Or if the altitude be greater than the height of the eye; in the perpendicular AD, set off AH equal to that altitude; and draw lines from A and H to any point V in the horizontal line DE, as AV, HV. Then any line FG drawn parallel to AH, and comprehended between the lines AV, HV, will represent the altitude AH at the point F of the picture.

And if the perpendicular object be on this side of the picture, produce the lines VA, VH; and at any point *f* draw *fg* parallel to AH, and *fg* will be the representation of AH at the point *f*.

The truth of this appears by the 3d method in the last Prob. This is called a *Flying scale*.

SCHOLIUM.

It may be proper sometimes in finding an altitude, to do it in a separate paper, and afterwards to put it into its proper place in the draught. And this is done where there is a multitude of lines, which will be apt to confound one another.

Fig.

PROB. XIII.

To draw a ſolid body in Perſpective.

From all the angles of the body, let fall perpendiculars upon the geometrical plane, and find the appearance in the picture of all the points where the perpendiculars fall (by Prob. VI); upon all theſe points raiſe perpendiculars (by Prob. XI. or XII.) of due lengths, as taken from the ſolid; the tops of theſe being joined with right lines, as they appear in the body, will give the perſpective draught thereof. But ſuch lines muſt be left out as are hid from the eye behind the body. And this being properly ſhadowed, makes the draught complete, and thoſe planes muſt be ſhaded the deepeſt that are moſt oblique to the eye.

If there be any curve lines in the body, perpendiculars muſt be let fall from ſeveral of their points, on the geometrical plane, and the points of interſection put in perſpective, and perpendiculars erected of a due length; then all the reſt is to be done by hand.

Before you begin, you muſt make choice of ſuch a poſition of the body, that the work may be the eaſieſt done; and that the moſt parts of it may be ſeen, and that it may appear to the beſt advantage. If a parallelopipedon be propoſed, it may be placed with one ſide parallel to the picture, ſo that two faces beſide the top may be ſeen. If a ſolid has a triangle for its baſe, it may be ſet to advantage, by placing one ſide parallel to the picture. And if they be ſet to touch the table it will ſhorten the work.

In drawing all bodies, you muſt have its plan drawn out upon the geometrical plane. And if the body be much compounded, you muſt have the front

front and profile, or the sections thereof made by perpendicular planes, which is to direct you in the altitudes of the several parts, and their places and positions. You must work by the plan for making the base of the body; and by the front and profile for getting the altitudes, to be erected upon the several parts of that base. The profile shews these heights, and the plan shews where they are to stand. Fig.

Example 1.

To draw a cube in perspective. This is so simple, that it needs neither profile nor plan. Let AB be the ground line, S the point of sight, D the point of distance. Let one side of the cube be in the ground line at EF. To the point of sight S, draw ES, FS. Also draw DF to the point of distance, to cut ES in H. Draw HG parallel to EF, to cut SF in G. Then EFGH is the base, upon which at the points E, F, G, H, are to be raised perpendiculars equal to EF. Therefore make EI and FK = to EF. Also make GL and HM = HG, then I, K, L, M, are the tops of these perpendiculars; then draw IK, KL, LM, MI, and they compleat the cube. 47.

For since the sides of the cube are all equal, and EF, FK, KI, IE are all in the picture, their representations are equal to these lines. And (by Prob. XI.) HG is the image of EF; and HG, GL, LM, MH being parallel and equidistant from the picture, are all equal in appearance. Therefore EGI is the cube drawn in perspective.

Ex. 2.

To draw a triangular prism, whose base is an equilateral triangle. Let one side be in the ground line AB, at NO. Find the appearance of the other angle of the base at P, by Prob. VI. Then NOP is the base. Make NQ equal to the height of the 47.

Fig. 47. prism, and draw QS, and thro' P draw RV parallel to NQ, then set off P*p* equal to RV, and perpendicular to BA; also make N*n*, O*o* equal to NQ, and perpendicular to AB. Then draw *no*, *op*, *pn*; and NOP*pno* is the prism required.

Ex. 3

48. To draw a parallelopipedon, whose base is a rectangle. Here P is the plan and Q the profile; AB the ground line, DS the horizontal line, S the point of sight, D the point of distance. By Prob. VI, find the appearance in the picture of all the points in the plan, as D, D, D, D, I, I, I, I, make FO equal to the perpendicular height of the body, draw OS, and thro' D, and I, draw the lines KD, LI parallel to AB: at D, D, erect two perpendiculars equal to KD, as D*d*, D*d*. And at I, I, raise two perpendiculars equal to LI, as I*i*, I*i*. Then drawing the slant lines as in the profile, and also the lines *di*, *ii*, *id*, *dd*. You have the parallelopipedon required.

Ex. 4.

49. To draw a cylinder in perspective. Let AB be the ground line, SD the horizontal line, S the point of Sight, D the point of distance, OGHK the base of the cylinder on the geometrical plane. Let the diameter OH be perpendicular to AB, and the diameter GK parallel to it; from all the points O, G, H, K, and as many more intermediate points as you will, let fell perpendiculars to the ground line AB; from which points draw lines to the point of sight S. Make FC, FA = to FO, FH; draw AD, CD to the point of distance D, cutting SF in *h* and *o*, so will *ho* be the image of HO. In like manner *g* is the image of G, and *gk* drawn parallel to AB, to cut DC in *k* gives *gk* for the image of GK. And as many intermediate points may thus be found as you desire. Then joining all these points by a curve line, gives the base of the

the cylinder *ghko*. Make CB the altitude of the cylinder, and draw BD; and from *o*, *k*, *h*, draw parallels to AB to cut BD; and the lengths of these parallels set perpendicular at the points *o*, *k*, *h*, *g*, gives the altitude of the cylinder in these several points; and as many more intermediate altitudes may be set up as you please, by the scale CDB. Then the curve 1234, drawn thro' these points, determines the top of the cylinder. If the cylinder be an oblique one, instead of raising the perpendiculars from *o*, *k*, *h*, *g*, they must be raised from the points where the perpendiculars from the top cut the plan, and at last the oblique lines *o*1, *k*4, *h*3, *g*2 must be drawn, and the curve thro' the points 1, 2, 3, 4, as before. Fig. 49.

Ex. 5.

Let a pyramid be put in perspective with a hexagonal base. Let CEFGHI be the plan of the base. From all the angles of the base let fall perpendiculars upon the ground line AB, and from the points of intersection, draw lines to the point of sight S. Then setting off the distances of these angles from AB, from these points, towards B, draw lines to intersect the former. Thus H, I, C are projected into *h*, *i*, *c*. Then drawing lines from *h*, *i*, *c*, parallel to AB, will by their intersections with the correspondent lines, find the points *g*, *f*, *e*, which are the projections of E, F, G. Then if P be the point where the perpendicular from the vertex cuts the base, find its projection *p*, as you did the rest. Set off the altitude of the pyramid from 1 (in the perpendicular P1) to 2, and draw 2S; and thro' *p*, draw 3*p* parallel to AB, which set from *p* to V, perp. to AB. Then draw lines from the vertex V to all the angles of the base, *cefghi*; as V*e*, V*f*, V*g*, V*h*, V*i*, V*c*; or rather leaving 50.

Fig. 50. ing out V*c* and V*e*, which are invisible, draw the rest of the lines, and the pyramid is finished.

Ex. 6.

51. To draw the frustum of a square pyramid in perspective. Let P be the plan of the base, Q the profile. From all the angles of the plan, let fall perpendiculars on the ground line AB, from the points of intersection draw lines to the point of sight S. Then take successively the distances of these angles from AB, and lay them from their correspondent perpendiculars towards A; and from the points where they fall, draw lines to the point of distance D, to intersect the correspondent lines drawn towards S; the points of intersection joined by right lines, gives the perspective of the base LMNO, and likewise of the interior square 1234. Then make BC the perpendicular altitude of the frustum, according to the profile, and draw lines from any point S, as SB, SC. From 1234 draw parallels to AB, to intersect SB, in certain points, from which other parallels must be drawn to BC, reaching to SC; and these last parallels must be set off from the corresponding points 1, 2, 3, 4, perpendicularly; these give the angles at the top at *l*, *m*, *n*, *o*. And the lines *lm*, *mn*, *no* *ol*, being drawn, give the top end of the frustum; and lastly, the lines *l*L, *m*M, and *o*O drawn, and the side L*o*, and top *mo*, shaded; the frustum is finished.

Ex. 7.

52. To represent a hollow cube in perspective. Let P be the base, from all the points of it, let fall perpendiculars to the ground line AB, and set off their distances along BA, as before. Draw lines from the first points to S, and from the last to D, to intersect in the points of the perspective base, as at L, M, N, O, and 1, 2, 3, 4. Make BC the height,

Fig. 45.

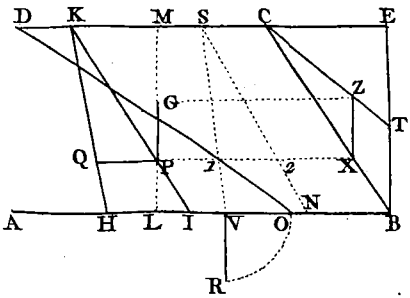

46.

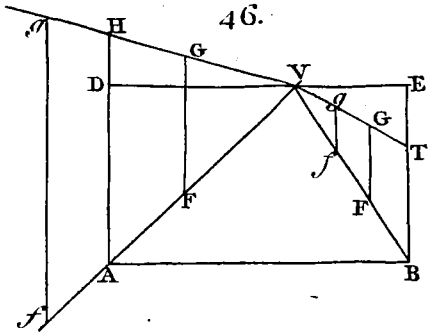

47.

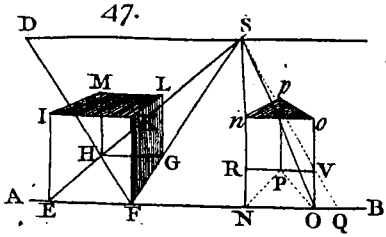

48.

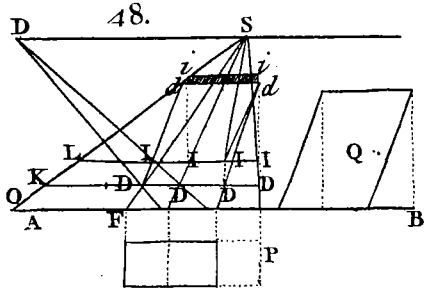

49.

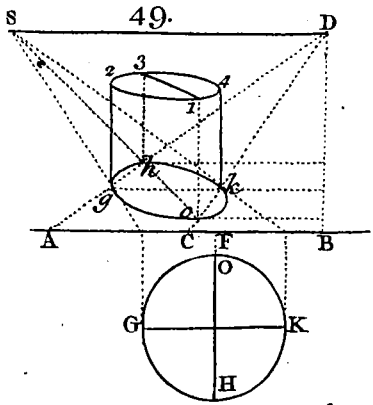

50.

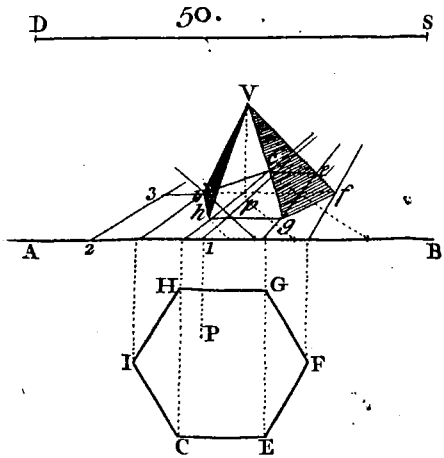

height, equal the side of the cube. And make a scale SCB as before for setting off the altitudes, by drawing from L, 1, 4, O parallels to AB, and from the points of their intersecting SB, draw parallels to CB, for the respective altitudes at L, 1, 4, O, and those opposite on the other side. Several lines are left undrawn to avoid confusing so small a figure; but the way of proceeding is evident. Fig. 52.

Ex. 8.

To draw several rows of square pillars, at equal distances and of equal heights. 53.

First describe the bases or situations of all these pillars, which is best done by describing a floor of squares, as in Ex. 4. Prob. VIII. and upon each row of squares taken at equal distances, erecting perpendiculars upon the several bases, equal to the given height. Here the squares are all equal to the designed bases of the pillars; the pillars being all finished, such squares as are hid behind the pillars must be rubbed out, and the parts that are visible may be drawn in full.

If instead of square pillars you would have cylinders, then the squares must be made equal to the diameters of the cylinders, and describe the representation of the circles of the bases within the squares, upon which perpendiculars must be erected as before. Or if they be cones, perpendiculars must be erected from the middle of every correspondent square, from the top of which two right lines must be drawn to the sides. And after this manner any other prismatic bodies may be drawn, having any poligonal bases, describing first the bases of the polygons in their proper squares, and erecting perpendiculars at every angle, of the height given; and compleating the solids.

As to the square pillars, it is evident that two parallel sides are parallel to the ground line AB, and

Fig. 53. and the other two ſides, which are alſo parallel, range to the point of ſight S.

Here the foremoſt pillars ſtand in the ground line AB, but if they had been at ſome diſtance, the images of the firſt would have been diminiſhed, which requires ſo much labour, more than if they had ſtood in the ground line.

Ex. 9.

54. To draw an equilateral croſs, ſtanding upright upon the geometrical plane. Draw the plan PP and the profile QQ. Let the plan PP be drawn in perſpective, which will be *cccc*; and from the points *c*, *c*, *d*, *d*, &c. raiſe perpendiculars to the ground line AB, upon which ſet off the heights of the croſs in theſe particular places, according to the profile, but diminiſhed, becauſe it does not ſtand upon the horizontal line. Then all the lines being drawn as in the figure, will give the perſpective appearance of the croſs.

If the croſs had been double, the plan would be the ſame as the profile PQ, and the fore part would come to the ground line AB, and perpendiculars muſt be erected at R, *r*, &c. of a proper height, and lines drawn to terminate the other ends of the croſs.

Ex. 10.

55. To repreſent a hollow priſm ſtanding upon an edge. Let P be the plan, Q the profile when cut thro' the middle. Produce the lines of the plan till they cut the ground line AB, and from thence draw lines to the point of ſight S. Then ſetting off the diſtances in the plan, 3, 1, 4, &c. along the ground line towards A, draw lines to the point of diſtance D as uſual, which will find the points 3, 1, 4, &c. on the lines drawn to the point of ſight, correſponding to the points 3, 1, 4 in the plan. Then

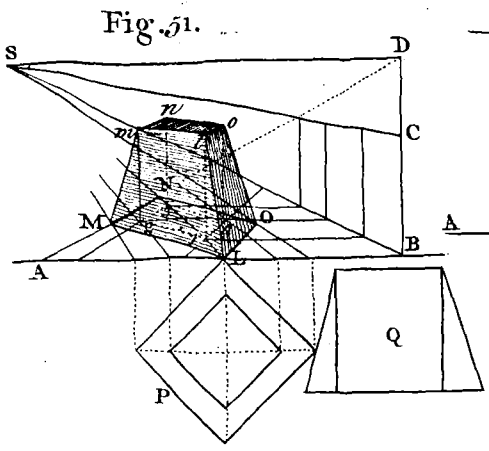
Fig. 51.
S
D
C
B
A
M
N
O
L
n
o
m
l
P
Q

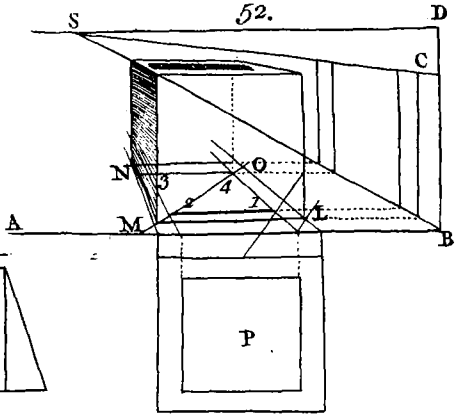
52.
S
D
C
B
A
M
N
O
L
1
2
3
4
P

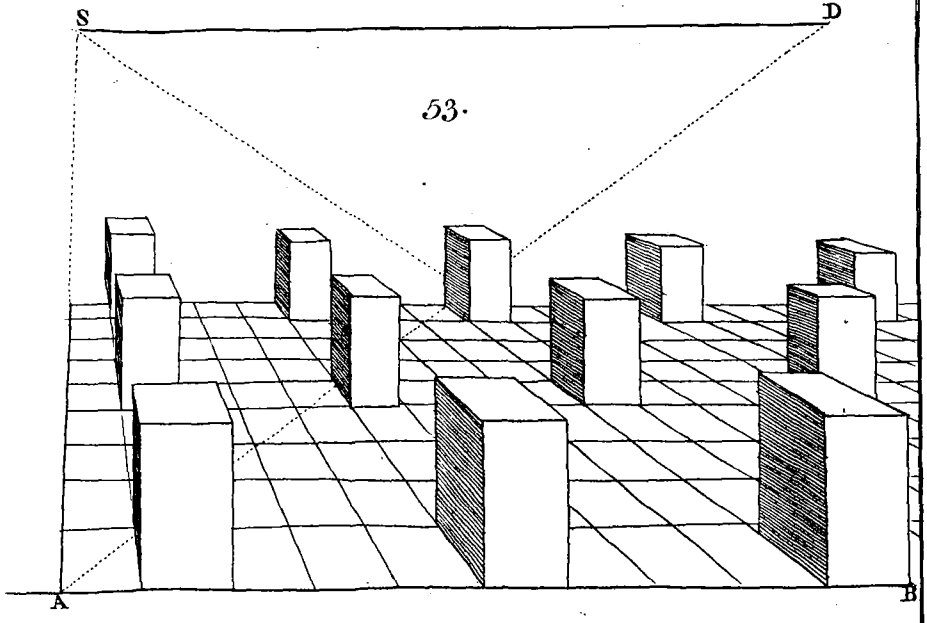
S
D
53.
A
B

Then from the points 2, 2 in the picture, raise perpendiculars by the plan, which will give the external angles 2, 2 of the prism, the points 1 and 1 are the angles of it below, and perpendiculars erected at 1, 1, by the plan, will give the angles 1, 1 at the top. Then the lines 12, 21, 11, 12, 21, 11, being drawn, give the external circumference of the foreside of the prism. Then to find the inner circumference bounding the cavity, from 3, 4, &c. in the line S2, raise perpendiculars according to the profile, which will be *r*5, *r*5; these will give the points 5, 5, 5, 5, being the inner angles of the internal poligon. And from 3, 3 raise other perpendiculars, which are equal to *r*2 by the profile, and these will give the points 3, 3. Then these points connected by right lines will give the inner polygon, 535535. In drawing these perpendiculars, they must be diminished according to their situation by Prop. XV. and ought to be drawn in a separate paper, to avoid so great a confusion of lines; then for the back side of the prism, or that from the eye; since the position of the prism is such, that its axis is parallel to the ground line, the intersections of all the faces with one another, will be parallel to the picture; and therefore to find the angles, draw from the points 1, 2, &c. lines parallel to AB, whose length must be 2B, but diminished according to their situations; these give the angles 6, 6, 6, which joined by right lines give the appearance of the back side of the prism 666, as far as it is visible. Then for the inner part, from 3, 5, &c. draw lines parallel to AB as before, but diminished by Prop. XV; which will give the points 7, 7; and lines being drawn from one to another, will give part of the inner poligon on the back side, so far as it is visible thro' the hole. And the planes that bound it, being properly shaded, we have the representation of the hollow prism as required.

Fig. 55.

Fig. required. But it is impoſſible to repreſent all the operations in ſo ſmall a draught.

Ex. 11.

56. *To draw a trough in perſpective, being a hollow parallelopipedon.*

Here P is the plan, and Q the profile or perpendicular ſection. From all the angles in the plan, draw lines perpendicular to the ground line AB, and draw lines from thence to the point of ſight S. Set their diſtances toward A, and draw lines from thence to the point of diſtance D, to cut the former, which will give the points *n*, *n*, &c. in the picture. From the ſeveral points *n*, raiſe the perpendiculars *no*, in the picture, being the repreſentation of *no*, *no*, &c. in the profile. Likewiſe erect the perpendiculars *nr*, *nr*, &c. to repreſent *nr*, *nr* in the profile, which will give the bottom of the trough. Having got the points *n*, *n*, on one ſide, you need only draw *nn*, *nn*, &c. parallel to AB, to cut the lines proceeding from S, which will give the points *n*, *n*, on the oppoſite ſide. In like manner, having got the points *o*, *o*, &c. on one ſide, thoſe on the other ſide are had by drawing parallels to AB, to cut the perpendiculars on the oppoſite ſide, which gives the points *o*, *o*. Then the lines *nn*, *nn*, &c. being drawn give the baſe; and *oo*, *oo*, &c. likewiſe drawn, give the edges at top, on the outer and inner ſide. Likewiſe *rr*, *rr*, &c. drawn makes the bottom. And *no*, *no*, &c. drawn give the corners, which finiſhes the trough.

Ex. 12.

To draw a parallelopipedon leaning againſt a wall.

57. Let P be the plan, Q the profile, or front view. From all the points 1, 2, 1, 1, where the plan cuts the ground line AB, draw lines to the point of ſight S;

Fig. 54.

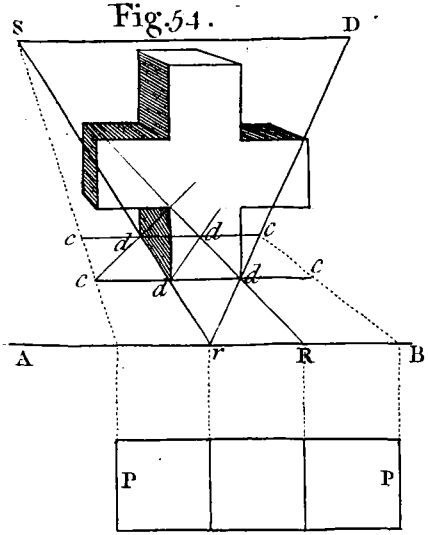

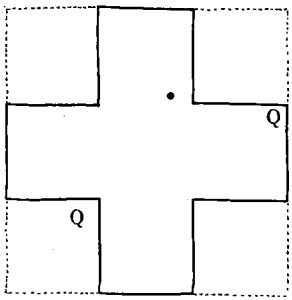

55.

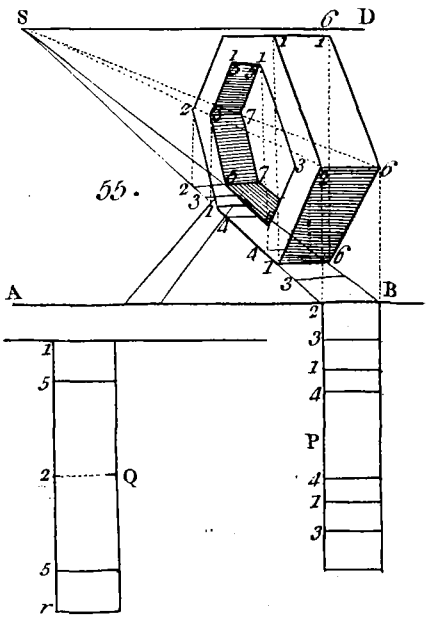

56.

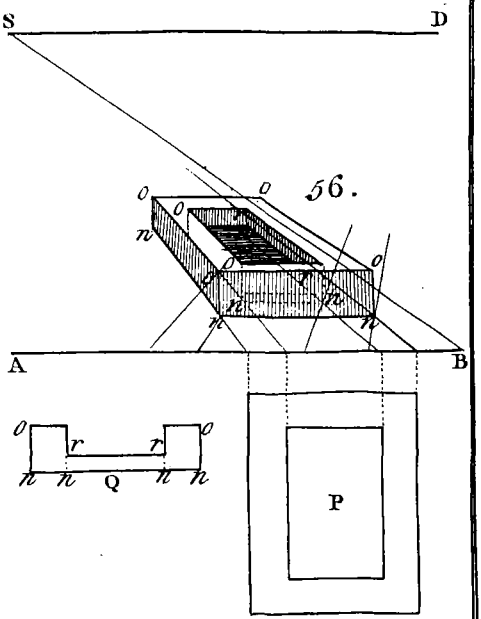

S; then setting the distances of 1, 3, &c. towards B, draw lines to the point of distance D, to intersect the former in points of the base, where perpendiculars are to be erected; which being done, by the profile, diminishing those that are on the further side; the points 4, 4, 4, and 5, 5, 5, are found, which are the corners at the top. Then thro' these points, drawing lines as in the solid itself, we have 1444 for the first face, and 555 for the further face of the solid. Draw 45 and 54, and the solid is finished. Fig. 57.

PROB. XIV.

To find the image of the Sun in the picture.

Let DR be the horizontal line, AB the ground line, S the point of sight, D the point of distance. Draw QS perpendicular to DR, and make SQ = SD, and make the angle SQN equal to the sun's declination from the vertical plane, on the left or right, according as the ray drawn thro' the eye and the sun intersects the picture. Then draw NL perpendicular to DS, and take NR = NQ, and make the angle NRL equal to the sun's altitude, above or below the horizontal line DS, according as the sun's ray drawn thro' the eye intersects the picture; then L is the image of the sun in the picture. Also draw LI parallel to DS, to cut QS in I, and N is the point of *declination*, and I the point of *inclination* in the picture. 58.

For if the triangle NQS be raised up till it stand perpendicular over NS; then since the line SQ is equal to SD the distance of the eye from the picture; and the angle SQN, is the declination of the sun from the picture; therefore the sun's image will be somewhere in the line NL. Again, since NR is equal to NQ, the distance of the eye from N, and the angle NRL is the sun's altitude, therefore

Fig. 58. fore he is in the point where RL intersects NL; and that is at L.

Cor. *If the sun is in the plane of the picture, his place* L *will be at an infinite distance, in the line* RL.

For then his declination from the vertical plane, is 90 degrees.

PROB. XV.

59. *To find the appearance of the shadow of a right line, perpendicular to the geometrical plane, to the picture, or to the vertical plane; cast upon that plane, or their parallels, by the sun's light.*

1. Find the appearance of the sun in the picture at L by the last Prob. and also the points N and I, the points of declination, and inclination, And let GH be a line perpendicular to the geometrical plane. Thro' the point of declination N and the foot of the line H, draw the line NH, which must be terminated by drawing the line LG from the place of the sun thro' the top of the line G to intersect NH in M, then HM is the image of the shadow of GH. Also the shadow of GH upon the picture or vertical plane will be parallel thereto. And therefore the image will be perpendicular to AB.

For (by Prop. XXI) the shadow MH tends to N, the point of declination; and M is the shadow of G. Therefore MH is the shadow of GH. The rest follows from Cor. 2. Prop. III.

2. Let FK be a line perpendicular to the picture. Let fall FC perpendicular to the geometrical plane, and thro' N and C draw N*cf*; thro' L the sun's place and F, draw LF*f*, cutting NC*f* in *f*, which is the shadow of F. Draw *fk* toward S, likewise draw LK cutting *fk* in *k*, then *k* is the shadow of K, and consequently *fk* is the image of the

the ſhadow of FK. And by Prop. XXI, *fk* muſt tend towards the point of ſight S. And if the ſhadow of FK falls upon the vertical plane, its ſhadow will be parallel to FK, and its image will tend to S. Fig. 59.

Let PQ be alſo perpendicular to the picture, draw QR parallel to SL, and QR will be the direction of the ſhadow in the picture; ſuppoſing the ſun on your back, and it is terminated by drawing LP from the place of the ſun, to the end P of the line, to cut QR, ſomewhere in the plane ARQ; for the part of the ſhadow that falls without the plane is loſt. For if it cut it at R, then R is the ſhadow of P, and QR the ſhadow of QP in the picture; and if a line perpendicular to the picture was erected at S, it is evident its ſhadow would tend to L. But PQ being parallel to the line at S, its ſhadow by the ſun's light, will be parallel to the ſhadow of the other, or to the line SL, as is evident by Prop. XXI.

3. Let VZ be a line perpendicular to the vertical plane. Thro' the point of inclination I, and the foot of the line Z, draw the line I*Zv*, which is the indefinite ſhadow of VZ, and muſt be terminated by drawing the line LV thro' the place of the ſun, and the end of the line VZ, to interſect the ſhadow *Zv* in *v*; then *Zv* is the ſhadow of VZ in the picture, or its appearance.

For (by Prop. XXI.) the image of the ſhadow *v*Z tends to I the point of inclination, and *v* is the ſhadow of V; therefore *Zv* is the ſhadow of ZV, upon the vertical plane Z*v*I, ſuppoſing the ſun in your face; otherwiſe the ſhadow muſt be directed the contrary way.

Again the ſhadow of VZ upon the geometrical plane will be parallel thereto (by Cor. 1. Prop. XVIII), and therefore parallel to the ground line AB; and this ſhadow being taken as an object, its

Fig. 59. appearance in the picture will alſo be parallel to AB, by Prop. III. Likewiſe the ſhadow of VZ upon the picture will be parallel to VZ, and that ſhadow coincides with its image.

Cor. 1. *Hence if a line be perpendicular to the geometrical plane, the image of its ſhadow upon the vertical plane or the picture, is perpendicular to the ground line. If a line be perpendicular to the picture, the image of its ſhadow upon the geometrical plane and vertical plane, tends to the point of ſight. And if a line be perpendicular to the vertical plane, the image of the ſhadow upon the geometrical plane, or the picture, will be parallel to the ground line. And the ſame of their parallel planes.*

Cor. 2. *When the ſun is in the plane of the picture; the image which a right line perpendicular to the geometrical plane, caſts upon that plane or its parallels, is parallel to the ground line; upon the vertical plane or its parallels, is perpendicular to the ground line.*

For the point N in this caſe is removed to an infinite diſtance along the line SD, and therefore NHM will be parallel to AB, which is the appearance of the ſhadow of GH.

Cor. 3 *When the ſun is in the plane of the picture; the image which a line perpendicular to the picture, caſts upon the picture or its parallels, is parallel to* LS. *Upon the geometrical plane or its parallels, tends to the point of ſight; upon the vertical plane or its parallels, tends to the point of ſight.*

For if a line be erected at L, perpendicular to the picture, LS will be the ſhadow thereof; and all lines parallel to that line, will have their ſhadows parallel to one another and to LS. When the ſhadow falls upon the geometrical or vertical plane; then the real ſhadow will be perpendicular

to

to the picture; and consequently its image tends to the point of sight. Fig. 59.

Cor. 4. *When the sun is in the plane of the picture; the image of a line perpendicular to the vertical plane, falling on it or its parallels, will be perpendicular to the ground line. On the geometrical plane or its parallels, is parallel to the ground line. Upon the picture or its parallels, is an infinite surface.*

For the point I being removed to an infinite distance, in the line SI, the line IZ*v* will be parallel to IS, or perpendicular to AB. And on the geometrical plane the real shadow is parallel to the ground line, and therefore its image is also parallel to the ground line.

PROB. XVI.

To find the image of the shadow of a right line falling upon an inclined plane, by the sun's light.

Let CE be a right line or any upright object upon the geometrical plane, PFQ an oblique plane cutting the geometrical plane in the line RV; let OKB be a plane parallel to the vertical plane, and therefore perpendicular to the geometrical plane, and cutting the oblique plane RQ in the line PQ, and the geometrical plane in KB. Let N be the point of declination, and I the point of inclination, L being the sun's place. Thro' E the foot of the object, and N the point of declination, draw NEG to the foot of the plane OKB. From G raise the perpendicular GH, to cut the top of the oblique plane PQ in H, and from F, where the line NG cuts the base of the oblique plane, draw FH. Lastly from the place of the sun L, draw the top of the object C, the line LCZ cutting FH in Z, where the shadow is terminated. Then EFZ is the shadow of the object CE. 60.

Fig. 60. For (by Prob. XV.) EFG is the direction of the shadow of the object CE, and GH is a part of the shadow when the oblique plane is taken away. Therefore FH is the shadow upon the oblique plane. And this is terminated at Z by the line LC produced to cut FH in Z; where Z is the shadow of C.

Cor. 1. *If the oblique plane* RQ *was taken away, the shadow would be* EGH; *the part* EG *upon the horizontal plane, and a part of* GH *upon the perpendicular plane.*

Cor. 2. *If the object* CE *had been higher, a part of the shadow would have fallen upon the line* HT; *and then the shadow of* CE *would have fallen upon the three planes,* NB, RQ, *and* BO.

Cor. 3. *After this manner it will be easy to trace the shadow of any perpendicular object thro' any number of planes however situated.*

Cor. 4. *If the object is not perpendicular to the geometrical plane, yet its shadow may be found, by letting fall a perpendicular from the top as* CE, *and finding the point* Z *as before; and drawing thro' the foot, which suppose to be at e, the line* NeV, *and then drawing* VZ.

SCHOLIUM.

This supposes the sun to be beyond the picture; but if it is behind your back, you must raise the plane OB perpendicular to the geometrical plane as before, but parallel to the picture. And the rest of the work will be the same. Here if the line NE does not cut the base RV of the oblique plane, or if LC does not meet FH; the shadow will not fall upon the inclined plane. If a line is drawn from L thro' any point 1 of the line CE, to cut the line NE produced in 2; then will 2FZ represent

present the shadow of the part of the line C1; and E2 the shadow of the part E1 upon the geometrical plane. The shadow of the point 1 will be represented by 2; and so the representation of any point of the line CE may be found by drawing a line thro' L and thro' that point; and so it will be known whether that shadow falls upon the geometrical plane, or upon the oblique plane, or upon the perpendicular one. When the sun is in the plane of the picture, the points N and I vanish, being at an infinite distance, and then the line EF must be drawn parallel to the ground line AB, till it meet the oblique plane in F, at the common intersection of it with the vertical plane; and proceed with the rest as before. Fig. 60.

PROB. XVII.

To find the image of the shadow of a body upon the geometrical plane, when the sun is in the plane of the picture.

Let fall perpendiculars from all the angles of the body upon the geometrical plane; from all the points of intersection, draw lines parallel to the ground line, continued on the opposite side of the light. Then from all the angles of the body, draw lines parallel to the rays of the sun, to cut the former lines drawn thro' the feet of the perpendiculars, each with each; the points of intersection will determine the ends of the shadow. 61.

Examp.

Let DEFG*o* be an inverted pyramid, whose vertex is at *o*, in the geometrical plane; from the points D, E, F, G, let fall the perpendiculars D*d*, E*e*, F*f*, G*g*, upon the geometrical plane. From *e*, *f*, *g*, draw the lines *e*1, *f*2, *g*3, parallel to the ground

Fig. 61. line AB. Then thro' E, F, and G, draw the lines E1, F2, G3, parallel to the ſun's ray LS; TSL being the ſun's altitude. The firſt interſects *e*1 at 1, the ſhadow of E; the ſecond interſects *f*2 at 2, the ſhadow of F; and the third interſects *g*3 at 3, which is the ſhadow G. The point D is omitted, being on the other ſide of the body, can give no ſhadow. Then drawing *o*1, 12, 23, *o*3; theſe lines terminate the ſhadow of the pyramid. For 1*o* is the ſhadow of the ſide E*o*, and 12 of the line EF; 23 of the line FG, and 3*o* the ſhadow of the line G*o*. And therefore *o*123*o* is the ſhadow of the pyramid *o*DEFG.

PROB. XVIII.

To find the image of the ſhadow of a body upon the geometrical plane; when the ſun is out of the plane of the picture.

Find the ſun's place in the picture, as alſo the point of declination. Then from all the angles of the body let fall perpendiculars upon the horizontal plane. Thro' the places where they fall, draw lines from the point of the ſun's declination, continued beyond the body. Then draw lines from the ſun's place thro' all the angles of the body, to cut the former; the points of interſection will terminate the ſhadow of theſe perpendiculars; and the points of interſection being joined by right lines, terminate the ſhadow of the body, as repreſented in the picture. Note, ſuch lines as lie next the light and caſt no ſhadow may be left out.

Examp.

62. Let CD3 be the fruſtum of a pyramid. Find L the place of the ſun, N the point of declination, in the horizontal line NS; AB is the ground line. From

Fig. 57.

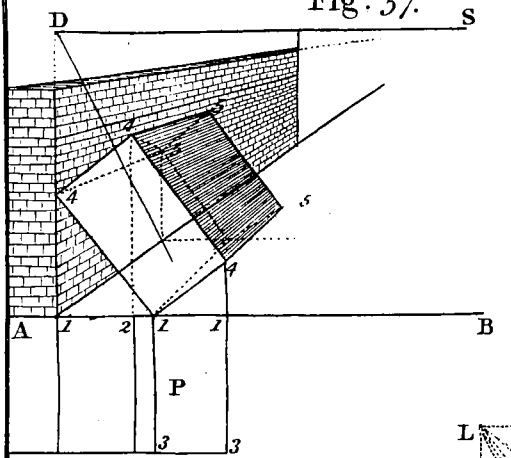

58.

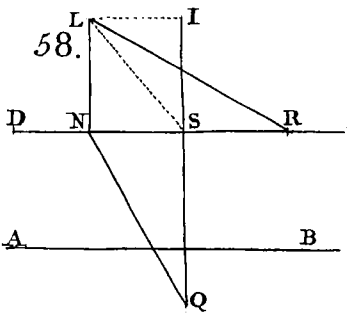

59.

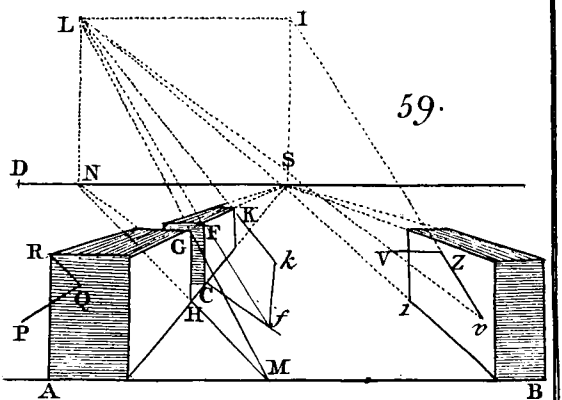

60.

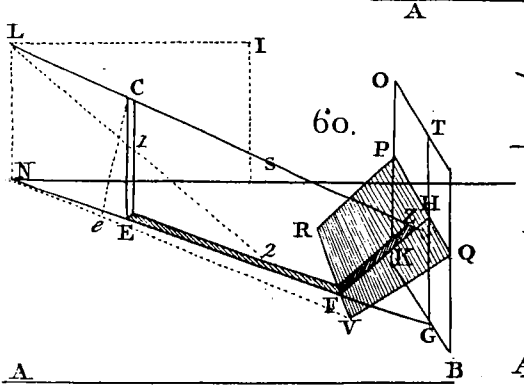

61.

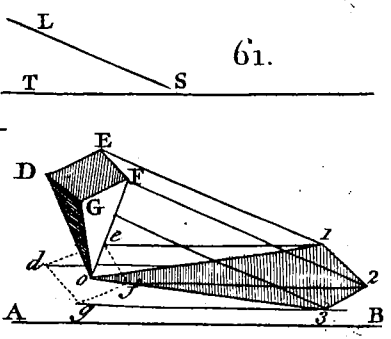

From the points C, D, E, which lye from the ſun, let fall the perpendiculars C*c*, D*d*, E*e*, upon the horizontal plane. Then thro' *c*, *d*, *e*, draw from N, the lines N*c*, N*d*, N*e*, continued beyond the fruſtum, and theſe are the indefinite ſhadows of the perpendiculars C*c*, D*d*, E*e*. Then to determine the ſhadows of the points C, D, E, draw from L the place of the ſun, thro' theſe points, the lines LC4, LD5, LE6; cutting the former lines drawn from N, in the points, 4, 5, 6, which are the ſhadows of C, D, E. Then drawing the lines 14, 45, 56, 63, they give the ſhadow of the fruſtum required. Fig. 62.

SCHOLIUM.

If part of the ſhadow fall upon an inclined plane, it may be found thereon, by finding the ſhadows of the ſeveral perpendiculars, after the manner of Prob. XVI; and then drawing lines from the extreme points which will terminate the ſhadow. And by Prob. XV. the appearance of the ſhadow of a line falling perpendicular to the picture or vertical plane may be found, or of any number of lines, and conſequently that of a ſurface or ſolid may be found on any of theſe planes.

In drawing any ſorts of ſhadows, they muſt be taken for objects; and therefore their real poſitions, upon the planes they fall on, muſt be known.

PROB. XIX.

To find upon the geometrical plane, the image of the ſhadow of a point, a line, a ſurface or ſolid, expoſed to a ſmall light.

From the point given let fall a perpendicular to the geometrical plane; likewiſe from the light, let fall a perpendicular to the ſame plane, to have the foot of the light. Then from the foot of the light

Fig. draw a line thro' the foot of the perpendicular, which is the direction of the ſhadow. Then draw from the light thro' the given point, a right line cutting the former, then the point of interſection is the ſhadow of the given point in the picture.

And the line contained between the foot of the perpendicular, and this point, is the ſhadow of the perpendicular.

After the ſame manner if another point is given, the image of its ſhadow may be found, and the line drawn between them is the image of the ſhadow of a line drawn between the two given points.

And thus the repreſentations of the ſhadows of all the lines and points in a ſolid may be found, and conſequently the image of the ſhadow of the whole body.

Exam. 1.

63. Let EHG be a cube ſtanding upon the geometrical plane; L a ſmall light, LP a perpendicular upon that plane. Then to find the ſhadow of the point F, draw from the foot of the light P, thro' the foot of the perpendicular G, the line PG3, for the direction of the ſhadow. Then draw thro' the light L and the given point F, the line LF continued to interſect the former in 3; then 3 is the ſhadow of the point F; and G3 is the ſhadow of the line FG.

Again for the point E; from the foot of the light P draw PI thro' the foot of the perpendicular EI, continued; then thro' the light L and the point E, draw LE continued to interſect the other in 2; then 2 is the ſhadow of the point E; and I2 the ſhadow of IE. And if 23 be drawn it is the ſhadow of EF. And G32I is the ſhadow of the plane GFEI. Again, for the point C and line CK; thro' P and K draw the line PK continued; and thro' L and C draw LC to cut the former in

1;

1; then 1 is the shadow of C, and K1 of KC. Fig.
Therefore drawing 12, 23, 3G; we shall have 63.
123G for the image of the shadow of the cube CGE.

Ex. 2.

Let DI be a cylinder, CE a perpendicular beam, 64.
L a small light, P its foot, GF a perpendicular wall. To find the shadow of the beam CE. Thro' the foot of the light P, and the foot of the beam E, draw PEF, which is the direction of the shadow upon the geometrical plane; where it touches the foot of the wall at F, raise FG perpendicular to the ground line. Then from the light L, and thro' the top of the beam C draw LCG, cutting FG in G, which is the height of the shadow. At the place I where the shadow meets the cylinder, set off the diameter of the cylinder, above the line EF, which will find the highest point of the cylinder, thro' which the shadow is to pass, and thro' that describe a semicircle for the form of the shadow. From L to touch the top of the semicircle at I, draw the line LH, which will intersect PF in H, the point to which the shadow of the cylinder reaches, at the point I. So that between H and the cylinder, we have the shadow of the cylinder; and beyond that is the shadow of the beam. As it passes over the cylinder, it is in form of a semicircle; and streight, from E to the cylinder. The truth of all this appears from Prop. XXII.

Ex. 3.

Let CE be an upright post, L a small light, P 65.
the foot of it, FG a flight of stairs; to find the shadow of the post CE, upon the steps. Thro' P and E, the foot of the light, and the foot of the post, draw the line PED, intersecting the horizontal line SD in D; and where it meets with the bottom of the first step at 1, there is a plane perpendicular

Fig. 65. pendicular to the geometrical plane, draw the line 12 upon it, perpendicular to the ground line AB; till meeting with another plane at 2, parallel to the geometrical plane; draw 23 towards D upon that plane, till you come to 3, where is another perpendicular plane; upon that draw 34 perpendicular to AB, till you come at 4, where you meet another horizontal plane, thro' which draw 45, ſtill directed to D; and at five where you meet with another perpendicular plane draw 56, ſtill perpendicular to AB; and then upon the next horizontal plane a line from 6 tending to D, which runs off the ſteps, and ſo there is an end of the ſhadow. If from L the point of light, and C the top of the poſt, the line LC be drawn, it cuts none of the former lines, and therefore the remainder of the ſhadow at top is loſt, and no where to be found.

For the plane of the ſhadow of CE, being perpendicular to the horizontal plane, will cut the planes of the ſteps which are alſo perpendicular to the horizon, in the lines 12, 34, 56, which are perpendicular to the ground line AB, which being parallel to one another, and to the picture, their appearances will alſo be perpendicular to the ground line, by Cor. 2. Prop. III. Alſo ſince the plane of the ſhadow interſects the horizontal ſteps in lines parallel to one another and to the line PD, their images 23, 45, all tend to their accidental point (by Prop. IV.), but (Prop. VIII.) their accidental point is in the horizontal line SD, and therefore at D, where PE interſects it.

SCHOLIUM.

By a like method, the repreſentation of the ſhadow of any point, line, &c. may be found upon any other plane, by letting fall a perpendicular upon that plane, from the point of the light, and alſo from the point given; as may eaſily be gathered

thered from what is delivered at Prop. XXII. and Fig.
the foregoing Problems. For the ſhadow of any point in the perpendicular, will be ſomewhere in the direction of the ſhadow, and the direction of the ſhadow is the line drawn upon that plane thro' the foot of the light, and the foot of the line. And the ſhadow of a point in it is in the line drawn thro' the light and that point, and is therefore where it interſects the direction of the ſhadow. And if the line of ſhadow meet any oblique plane, it may be traced upon that plane, by help of another plane drawn perpendicular to the firſt plane, as has been explained in Prob. XVI. in regard to the ſun.

PROB. XX.

To repreſent ſuch objects as appear by reflexion in the water.

Let AB be the ground line, SD the horizontal 66.
line, ABEF a canal or pool of water. GHN a tower with a ſpire upon it. Let LK be the level of the water under the tower HI, make K*h* = KH in the perpendicular H*h*, then the reflexion of the point H by the water, will be at *h*. Alſo let NI be the level of the water juſt under the point G at the vane, make N*g* = NG in the perpendicular G*g*, and *g* will be the reflexion of the point G by the water. And in like manner meaſuring the diſtance from N to the top of the vane at G, and ſetting it down in the line N*g*, gives the reflexion of the top of the vane at 1. If you have a mind to know how much of the tower HN appears in the water, meaſure the diſtance from N or I to the water-ſide at O, and ſet it for I to P; then the part from P to G appears by reflexion, the reſt below being incapable of being ſeen by reflexion, by reaſon of the interpoſed earth between L and O.

Again

Fig. 66. Again, if T be a tree near the water-ſide, and the level of the water under the top T be at V; then if V2 be made equal to VT, in the perpendicular T2, then 2 will be the appearance of T by reflexion. And thus meaſuring from any part of the tree, perpendicularly to the ſurface of the water or its level, and ſetting that length downwards towards AB, in a perpendicular line, from that ſurface, it will there give the ſame part of the tree as it appears by reflexion. And it will do the ſame for any other object, which is high enough, or near enough the water. For all objects ſeen by reflexion appear to be turned upſide down, the higheſt part appearing the loweſt in the water; and the loweſt to be the higheſt, where they touch at the ſurface. And all this is evident from the known laws of reflexion, which is this, that any object appears by reflexion, to be as far beyond the reflecting plane, as it really is on this ſide; that is, the object and its image are equidiſtant from the reflecting ſurface, and on contrary ſides. Whence if NI be a part of the reflecting ſurface, then will NG be equal to N*g*. And if LK be the reflecting ſurface, then will KH = K*b*. For the ſame reaſon will TV = V2. As ſome objects may be ſeen directly which cannot be ſeen by reflexion, as the part PK of the tower. So ſome others may be ſeen by reflexion which cannot be ſeen in a direct line. Thus you may ſee the hollow arch of a bridge both by reflexion and a direct view, if your eye is lower than the arch; but if your eye is raiſed higher than the bridge, you may ſee the top of the bridge directly, but not the arch, and yet you may ſee the arch by reflexion; for nothing hinders the rays from the under ſide, from falling on the water, and being reflected to the eye. And thus part of the tree T, which is covered by the other branches,

Fig. 62.

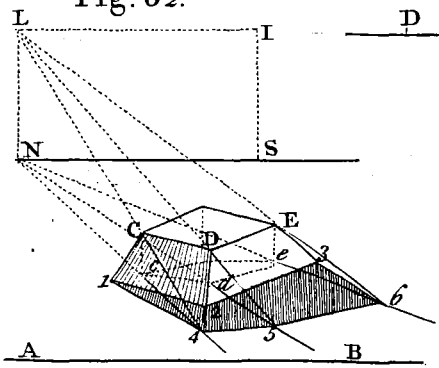

63.

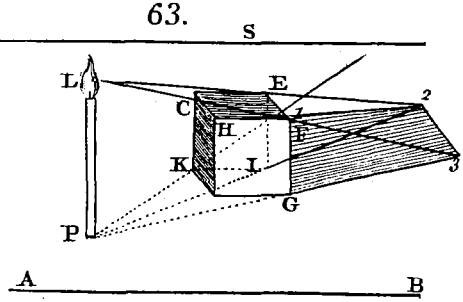

64.

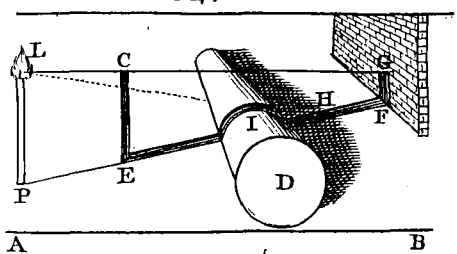

65.

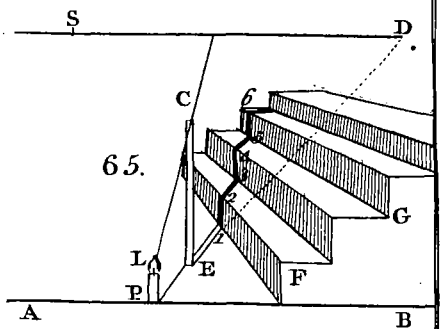

66.

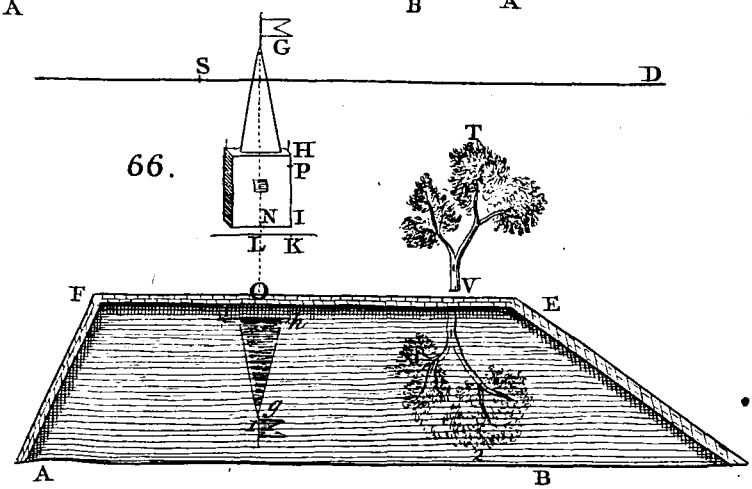

branches, cannot be ſeen directly; but may appear by reflexion in the water. Fig. 66.

PROB. XXI.

To take the perſpective draught of any place, as a Country, City, a Harbour with Ships, &c.

All the problems that have been hitherto delivered, are preparatory to the ſolution of this. For in a general view, all ſorts of objects offer themſelves, of which ſome lye upon the ground, ſome ſtand erect, and ſome ſloaping, ſome are ſtreight, and ſome crooked, bodies ſtanding ſome in one poſition and ſome in another; of various ſorts and forms, ſome near hand, and ſome far off; ſome with ſhadows, and ſome without. So that a perſon before he ſets himſelf to drawing in a general way, muſt make himſelf acquainted with all the foregoing problems, and have them ready in practice, to be applied as there is occaſion. To proceed then,

Take a piece of paper big enough for the purpoſe, as half a ſheet or a ſheet; and near the bottom draw a line for the ground line; and above that, at a diſtance equal to the deſigned height of the eye, draw another line parallel to it, for the horizontal line. The height of the eye, or the diſtance of theſe lines ſhould not be above half the height of the picture, and may be about a third part of it. When the objects are high in the air, the horizontal line muſt be drawn nearer the ground line, to make room for the appearance of the objects above. Then take the point of ſight in the middle of the horizontal line, or in ſome caſes near one end of it; and from it, on one or both ſides, ſet off the points of diſtance, equal to the principal ray, or the diſtance of the eye; which muſt at leaſt be equal to the breadth of the picture; but it ought

Fig. ought to be more, ſo that the picture may ſubtend an angle at the eye, of 45 or 50 degrees. The principal ray, or diſtance from the picture, muſt be more than the height of the eye, it ſhould be half as much more, or ſometimes even twice or thrice as much; and eſpecially when the point of ſight is near one end; and it ſhould never be leſs than eight inches, but may be as much more as you will.

This being done, the diſtances of all the objects, and their heights, muſt be meaſured (or at leaſt eſtimated) by ſome given meaſure, as miles, furlongs, yards, &c. And their ſituations, and poſitions, truly taken; all by the ſame ſort of meaſure. Then they are all to be laid down or planned upon paper, according to their ſeveral places, ſituations and diſtances, to be taken off ſome ſcale of equal parts of a convenient bigneſs, as a ſcale of inches, &c. keeping to the ſame ſcale thro' the whole work. And as the plan or ſituation of all theſe objects is commonly made, by drawing them all below the ground line in an inverted ſituation; yet this will be better done by drawing the plan in a ſeparate paper, of the ſame breadth as the picture, and placing all the objects in their true ſituations. The reaſon of drawing them on the contrary ſide of the ground line, in an inverted ſituation, is to hinder them from interfering with their images in the picture; and to preſerve the true diſtances of all and every part, from the ground line. But this is better done by drawing all the objects above the ground line in their true poſitions in a ſeparate paper; and for that reaſon it is more natural, than inverting all the objects, and ſo changing their places.

The plan of the work being laid down, it muſt be drawn in perſpective in the picture, according to the former rules, one part after another till the whole is inſerted. And if any of the parts be much

much compounded, and requires a great many lines; it will be better to do ſuch part in a ſeparate paper, and then transfer it to the picture. It will be proper to do this as often as there are any difficult parts to be laid down. Fig.

When any buildings, or bodies elevated in the air, happen to be in the view, as few are without; it will often be neceſſary to take the front view and the profile thereof by the ſame meaſure as the reſt; and then lay them down upon paper by the ſame ſcale. And from this draught, they muſt be drawn in perſpective by the rules of drawing ſolids. And here alſo they may be laid down on ſeparate papers when they require many lines; and at laſt transferred to the picture; and thus the picture will be kept clean and neat.

In the practice of all this, one muſt remember that all ſtreight lines are repreſented by ſtreight lines in the picture; and ſuch as are parallel to the ground line, on the earth, will be parallel to the ground line; and thoſe perpendicular to the earth, will be perpendicular to the ground line; and all lines perpendicular to the picture, tend to the point of Sight. Likewiſe all lines parallel to the baſe or the ground, have their accidental points in the horizontal line. And lines parallel to the vertical plane, have their accidental point in the vertical line.

Such objects as ſtand on your right hand, muſt be placed on the right hand of the vertical line; and thoſe on the left, muſt be on the left hand; and thoſe before, in the middle of the picture. And thoſe far off, high up in the picture. And objects that are higher than the eye, muſt be raiſed above the horizontal line.

In deſcribing objects at a great diſtance, their altitudes muſt be diminiſhed in proportion to the diſtance. And therefore a ſcale muſt be made (by Prob. XIII.) for every altitude concerned, which will ſhew

Fig. ſhew the altitude diminiſhed in every place of the picture. And here the profile muſt be made uſe of, when different heights are concerned. And theſe heights taken from the ſcale, muſt be raiſed upon their proper baſes in the picture, the tops of which joined by right lines, give the boundaries of the bodies, and then theſe bodies may be finiſhed, and duly ſhadowed. When this is done, in reſpect to all the objects that are to appear in the draught, then your view is finiſhed, as far as depends on the rules of geometry and perſpective. When all is done, the ground line, horizontal line, and other lines not belonging to the proſpect muſt be rubbed out; and to make the draught complete, it ought to be coloured, every object with its proper colour.

When objects are ſeen by reflexion in water, they muſt be drawn according to the rules laid down for that purpoſe; and then coloured of the ſame colour as the objects themſelves, but a great deal fainter, by reaſon of the loſs of light, by reflection at the ſurface of the water.

Likewiſe the colours of all objects ought to be ſo much fainter as the diſtance is greater; till at laſt they vaniſh in a blueiſh miſt.

Every one that would be a practitioner in the art of drawing, muſt furniſh himſelf with a drawing board and a Tee. This board or table muſt be right-angled at all the corners, and as big as to contain a ſheet of paper, and made ſmooth and flat. The tee (called ſo from its ſhape) is made after the manner of the carpenters ſquare, with the head thicker than the tong, and muſt be made exactly ſquare. Then a paper being paſted to the board at the four corners, it is ready to draw upon; and when you want to draw parallel or perpendicular lines, apply the head of the tee to one or other of the edges of the board, and then draw by the ſide of the tongue; and thus you may ſoon draw as many

many parallels or perpendiculars as you pleaſe, with- Fig.
out any trouble.

Example 1.

ACEB is a building, whoſe roof is ſupported by 67.
pillars; AB is the ground line, SE the horizontal line, S the point of ſight, and the point of diſtance is far out of the picture. Here the breadth of the houſe is AB, and the height of the eye is SD or EB. The floor here is laid with ſquares, alternately black and white, they lye in rows that run towards the point of ſight, and the other ſides are parallel to the ground line AB. F, F, &c. are two rows of pillars, one on each ſide, theſe are placed at equal diſtances, and range directly towards the point of ſight. G is the further end of the building, being a perpendicular wall of free ſtone; at that end of the houſe are four lamps or tapers H, placed to give light over the room. Between the pillars F, F, and the ſides of the building, are two walks laid with the ſame ſort of ſquares. In the two ſides of the room AC, BC, are two large windows I, I; theſe have each of them three lights, with iron ſtainſhals down the middle, and iron bars acroſs, to keep the jaums faſt. K, K, are arches carried over the building from the top of one pillar to that of another, all manner of ways; upon theſe the roof is built. C, C, &c. is the roof, the two wings on each ſide lye upon the arches L, L, and on others beyond them. The higher part of the roof C, C, ſtands upon the main arches. On the very top at the end of the roof, is placed a vane, to ſhew the wind. Before the entrance is a gravel walk DM, and a roller O to roll it with. On each ſide of it are three rows of trees, which tend to the point of ſight. Along AB is alſo another gravel walk.

Fig. 68.

Example 2.

Let SD be the horizontal line, S the point of ſight, D the point of diſtance, AB the ground line; C is a houſe on the left hand, whoſe profile runs up to the point of ſight S; in this profile you may ſee the windows which are all perpendicular to the ground line; from the end of it runs a wall E; which is perpendicular to the picture, and therefore it alſo tends to the point of ſight. At the end of the wall is another houſe, which ſtands in the ſame poſition. Beyond at F upon an aſcent, is a houſe ſtanding in a wood among a deal of trees; and at ſome diſtance from this is another houſe G upon a hill, with a garden walled in, before it; and near it is the ſummer houſe H, and beyond theſe is the country, riſing high, and covered with buſhes at I, I. On the ground line at K is a garden incloſed with a wall, in this are ſeveral beds with flowers, and ſome with fruit trees; being all perpendicular to the picture, tend to the point of ſight S. Adjoining to the garden is a church L with a tower indented at the top; this has its foreſide parallel to the ground line; and the ends being perpendicular to the picture, run towards the point of ſight. Behind the church is a houſe M, with its front parallel to the picture; this joins upon a garden N, with trees, herbs and flowers. On the other hand is the houſe O, ſtanding croſs the former, or with its face perpendicular to the picture, and therefore, it tends to the point of ſight S. Behind theſe houſes is another large church P, with a tower and a ſpire upon it, on the top of which is a weather cock, to ſhew the wind; this ſtands fronting the picture. Behind this church is another houſe or two Q, ſtanding in the ſame poſition, and having a chimney ſmoaking, as likewiſe have ſeveral of the reſt. R is an artificial fountain, where the aſcending water plays, and

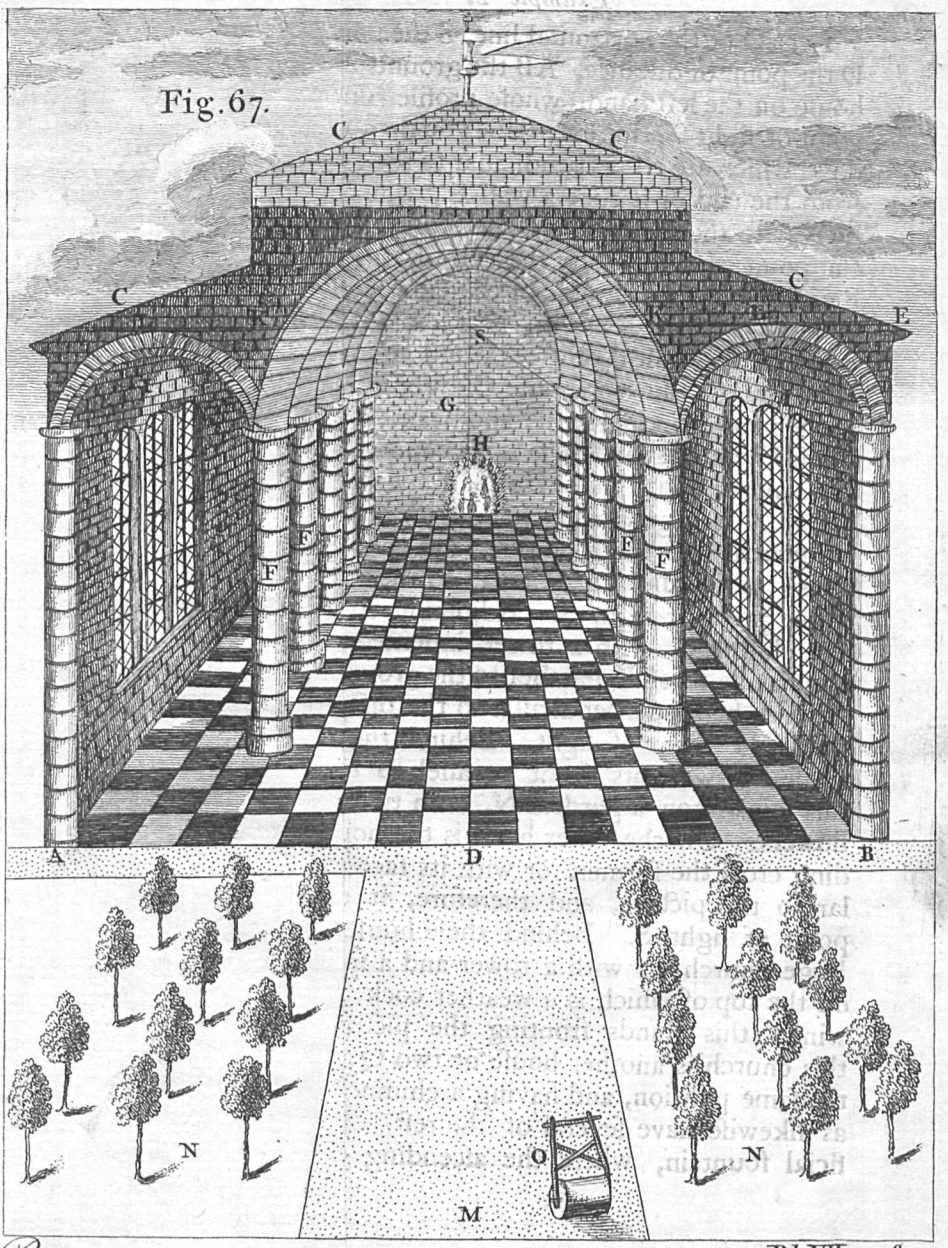
Fig. 67.
C
C
C
C
E
S
G
H
F
F
E
F
A
D
B
N
N
O
M

and then falls into the bason below. T several inclosures, and small fields. V several rows of trees. W an obelisk in a walk between some grass plats. X several fowls flying in the air. Y a windmill on the top of the hill. Z the clouds hanging in the atmosphere. Fig.

SCHOLIUM.

From what has been laid down before, concerning the nature of perspective; the following observations may be drawn.

All horizontal planes seated above the eye, seem to sink downwards, more and more, the further they are produced; till being infinitely produced, they at last become level with the eye. Likewise such planes as are below the eye, seem continually to rise upward, the further they go. Also those on the right hand approach to the left; and those on the left, towards the right. Therefore floors and pavements of buildings, when continued to a great length, seem to a spectator to rise upwards; and the roofs and cielings of buildings, appear gradually to descend, and therefore the longer such roofs are, the higher they should be made; to prevent their appearing too near the ground at a great distance.

All rows of columns, or of trees; and those of walls or the sides of buildings, seem to the eye of the spectator to contract themselves, the further they run; and continually grow narrower. And therefore the breadth thereof should be greater, where the length is greater; that their appearance to the eye may be the more delightful. And thus the capitals of pillars seem to incline downwards, and their pedestals to rise upwards. The horizon seems continually to rise from the eye, and at last to appear higher than it really is. But if a row of columns, perpendicular to the horizon, and of equal height, be lower than the eye; the tops of

Fig. them ſeem continually to riſe as well as the bottoms; and thoſe furtheſt off would appear the higheſt. But the contrary happens if they are above the eye, for then the furtheſt would appear the loweſt. Thus the ſurface of the ſea ſeems continually to riſe, and at laſt to be higher than the eye. Hence alſo a plane ſurface continued to a great diſtance will appear hollow. Statues and images raiſed on high, will appear only in their true proportion at a certain height; and at other heights will appear more or leſs deformed or out of proportion. And therefore the optical appearance of any object, in any place, muſt be conſidered.

From the tedioufneſs of drawing a perſpective view throughout, by geometrical rules, as has been now taught; no body ever puts it in practice. But inſtead of that, they make uſe of a mechanical method of doing it, which is this; they take a ſquare box, with a hole in the top facing the object, in which is placed a convex lens; and behind that, within the box is a reflector. This box being placed ſo as to face the country whoſe draught is to be taken, the rays of light flowing from all the objects, enter the convex glaſs, and are reflected downwards by the reflector, which is placed obliquely; and ſo they paint upon a white paper laid at the bottom of the box, the images of all theſe external objects, very diſtinctly if the convex lens be at its true diſtance; if not, the lens muſt be moved in or out, till the images are diſtinct. Then the draughts man, putting his head within the box, has nothing to do, but run over all the out-lines of the ſeveral objects with a pencil; all which being done, they may be finiſhed afterwards. Such a box for taking a perſpective view mechanically you have deſcribed to you in Prob. 24. Book IV. of the Optics. For it would be an endleſs taſk to go through all the particulars of ſuch a draught, by the common rules of Perſpective;

ſpective; not only for the number of lines it would Fig.
require, but for the great length of time requiſite for ſuch a work. And yet theſe rules are the eaſieſt that can be contrived, where the picture is ſuppoſed perpendicular to the horizon. For if the picture was oblique, the labour would be far more, to draw the objects in ſuch a poſition; and new rules are neceſſary to work by, and the objects when drawn make no better appearance than in the common way; and therefore no body would ever follow the practice upon oblique tables, and conſequently they are of no uſe, but merely for curioſity; and to ſhew what can be done by art. Therefore the common method is the moſt uſeful, and its principal uſe, is that of drawing ſingle objects; which require to be done very exactly; and to initiate the drawing by hand, which is by far the moſt uſeful and expeditious method. Hence no landſkips or views of countries are ever drawn by the method of perſpective, but by ſuch mechanical contrivances, as we have ſhewn; and that for the ſake of expedition. And this method is very exact too; for the images are diſtinctly repreſented on the paper, and in their true proportions, as they appear; and the drawing them truly, depends on the ſteady hand of the drawer.

I muſt obſerve, that when any view or landſkip is to be drawn in a publick place, as in a garden, on the ſcenes in a playhouſe, or the walls of a large room; the point of ſight is not to be taken in the air, where people cannot come. But it ought to be taken where moſt people reſort, and ſtand or ſit to look at it. For then it will appear to the beſt advantage and moſt natural. But if the point of ſight is taken in a different place, the proſpect will appear unnatural and deformed; as may be gathered from Cor. 2. Prop. XII.

Fig.

PROB. XXII.

By the inverse method of perspective, having a point given in the picture; to find its original in the geometrical plane.

In what goes before, we have treated only about the direct method of perspective, or the finding the place of any object in the picture, having its situation on the geometrical plane given. We shall here add a few propositions about the inverse method, which is finding the original, from having its appearance in the picture. As the place in the picture is found from having that in the geometrical plane, so by working backward, its place in the geometrical plane is easily found from having that in the picture.

69. Let N be the point given in the picture. From the given point N and the point of sight, draw the line SE to cut the ground line CB in E. Also from the point of distance D, thro' the same point N, draw the line DC, cutting the ground line in C; then CE is the distance of the point, in the geometrical plane, from the ground line. And therefore if E*n* be made perpendicular to AB, and equal to EC, *n* will be the point sought, but on the contrary side of the ground line.

For if *n* was given, its representation at N is found by drawing lines from S to E, and from D to C, to intersect in N, EC being made equal to E*n*. Therefore by the reverse operation, *n* is truely found.

PROB. XXIII.

69. *Having an object given in the picture, to find its real height, on the geometrical plane.*

Let OP be the object given; find the situation F, of the foot O, by the last Prob. And thro' F draw

draw FI perpendicular to AB, and from the point of sight S draw SP thro' the top of it, cutting the perpendicular FI in I. Then FI is the real height of the object upon the geometrical plane. For if FI be the real height, OP will be found to be the apparent height in the picture, by Prob. XI. Fig. 69.

Cor. *In like manner, if* OR *be a line in the geometrical plane, parallel to the ground line; then if* SO, SR *be drawn to cut the ground line in* F *and* G; *then* FG *is the real length of* OR.

PROB. XXIV.

Any oblique line in the picture being given; to find its original in the geometrical plane.

Let OP be the given line in the picture. Find the situation of the point P at F, and then its place *p* upon the geometrical plane, by Prob. XXII. Then produce PO to cut the ground line in E, and draw *p*E, which will be the original of PE. 70.

Likewise find the original of the point O, which will be at *o*; then *po* will be the original of the line PO, but inverted.

This is evident from the contrary process of finding the representation PO, from having the original *po*.

Cor. 1. *Hence the original of any plane figure given in the picture, may be found. For it is but finding the originals of all the lines, that inclose the figure; and then you'll have the original figure.*

Cor. 2. *And thus a solid being given in the picture, its original may be found, but with more labour. For all the base lines, and all the perpendiculars will be found as before; and thence all the surfaces that inclose it, and consequently the whole solid.*

Fig. 70. Cor. 3. *Hence the original of any angle may be found, by finding the original lines that form the angle.*

PROB. XXV.

Two or more lines being given in the picture, whose originals are perpendicular to it; and having the real length of any such base line; to find the points of sight and distance.

71. Let AB be the ground line of the picture, AEG a house, and BHM a wall; both the originals being perpendicular to the ground line AB. Produce any two sides, as AE, IK, BM, HL, which are perpendicular to the ground line in the geometrical plane; till they intersect, as AE and BM, which intersect in S, then S is the point of sight.

Again draw SD parallel to AB, and set the real length of the base line BF (which tends to the point of sight) from its situation B to C in the ground line; and thro' C and F draw the line CF cutting SD in D; then is D the point of distance; and SD the horizontal line; and the length of SD is the principal ray, or the distance of the eye from the picture.

For (by Cor. 2. Prop. IV.) the lines AE and BM tend to the point of sight at S. And therefore the point of distance is somewhere in the line SD drawn parallel to AB, which is the horizontal line. But if BC be the distance of a point from the ground line, and D the point of distance, and DB and DC be drawn to intersect in F, then F will be the image of that object. Therefore on the contrary, when CF is drawn thro' the image at F, it will go thro' the point of distance D.

Cor. 1. *Hence, in any perspective draught, having the horizontal line given; its center, or the point of sight may be found.*

For

Fig. 68.

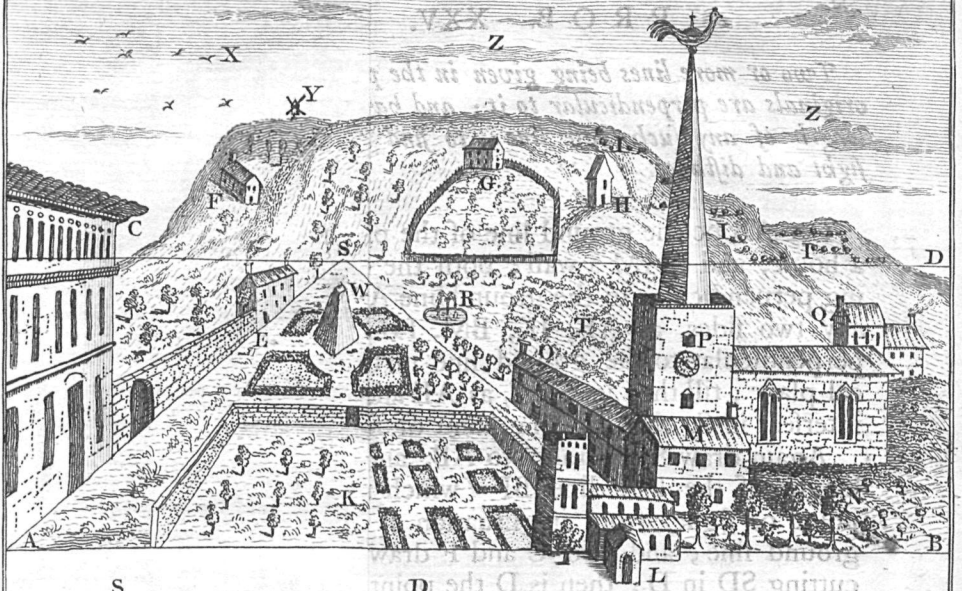
Z
X
Y
Z
J
G
H
I
F
C
S
L
P
D
W
R
Q
T
E
O
P
M
K
N
A
B
L

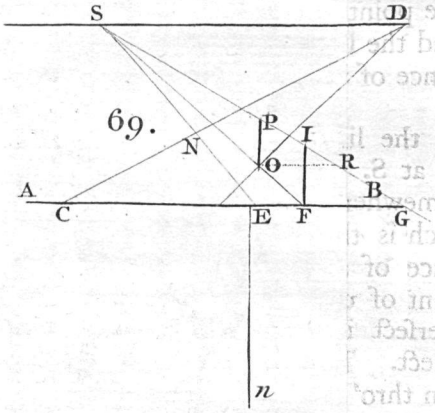
S
D
69.
P
I
N
O
R
A
B
C
E
F
G
n

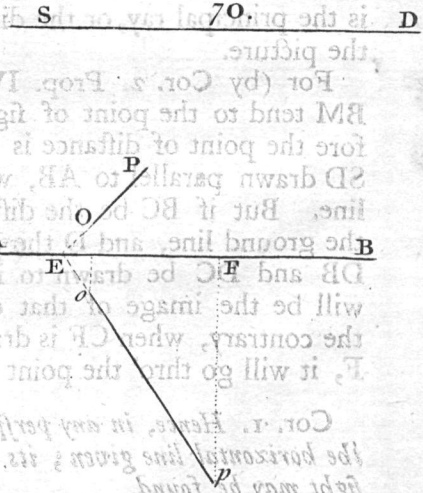
S
70.
D
P
O
A
B
E
F
o
p

For produce any line whose original is perpendicular to the picture, till it cuts the horizontal line, and there is the point of sight. Or if there is no horizontal line, produce two such lines till they cut one another. Fig. 71.

Cor. 2. *But the distance of the picture, or the principal ray, cannot be found, unless the real distance of some point or object (from the ground line) be known.*

For we only know, that the eye is somewhere in the perpendicular, raised upon the point of sight. But if a real distance be known, the distance of the eye will then be known, as laid down before.

Cor. 3. *If in any draught, it be known that several original lines are parallel, in the geometrical plane. Then their accidental point, and the horizontal line may be found.*

Produce two of these lines till they intersect, and the point of intersection is their accidental point; and that point is in the horizontal line. Therefore thro' that point, draw a parallel to the ground line, and that is the horizontal line.

PROB. XXVI.

Having the angle which any original object subtends at the eye, and also its image; to find the point of distance, or the point of view in the air.

Make the angle CEF upon the horizontal line, equal to the angle which the original object subtends at the eye. Let OP be the image of it in the picture. Make CF = OP, and place CF in the same position to EC, as the image has to the visual ray passing thro' O. Then CE is the distance of the eye from the point O in the picture. When that distance is had, erect a perpendicular at S the point of sight (found before), which must 72.

stand

Fig. 72. ſtand upright upon the plane of the picture; then the diſtance EC ſet from O, will interſect that perpendicular in the point of view. Then the diſtance between the point of view and point of ſight, or the principal ray, ſet from S to D, gives the point of diſtance D.

Having ſaid ſomething before of inclined pictures, I ſhall add a little more here; more out of curioſity, than any real uſe they are of.

PROB. XXVII.

To draw objects in perſpective upon an inclined picture.

I have ſhewn in Prop. XXIII. that the rules for drawing upon inclined pictures are the ſame as thoſe for upright ones; taking here a line parallel to the vertical line, inſtead of the height of the eye, in the upright picture; and taking lines ſtanding on the geometrical plane, parallel to the vertical line, inſtead of perpendiculars. I ſay lines in this poſition, and lines parallel to the ground line, will be drawn by the very ſame rules. Therefore in theſe caſes, you muſt work by Prob. VI. VII. VIII. and Prob. XI. for altitudes, And when perpendiculars are given upon the geometrical plane, you muſt firſt draw lines from their tops parallel to the vertical line, to cut the geometrical plane, and there you have their baſes; and then finding the images of one of theſe baſes, you muſt draw an oblique line obſcure. Then find the image of the foot of the perpendicular itſelf, and joining this laſt image, and the top of the former obſcure line, by a right line, you'll have the image of that perpendicular upon the inclined plane; and ſo of all the reſt of the perpendiculars. By this means planes may be drawn, and ſolids perpendicular up-

on

on the horizon or geometrical plane. And any Fig.
other sort of oblique lines may be drawn, by a like method, first drawing a slant line parallel to the vertical line; then you have two lines meeting at the top, or whose top is common to both; find the images of both the bases or feet, and the altitude of the said slant line; then join the top and the proper base belonging to that line, see Cor. Prop. XXI.

But the best way is, first to draw the profile of the picture, and the principal lines belonging to it; and find the accidental point of lines perpendicular to the horizon; or of any other lines, which are to be drawn in perspective. Thus,

Let SH be the picture, E the place of the eye, 73.
or the point of view. Draw ES and AH parallel to the horizon, draw EC perpendicular to AH, to cut SH produced in F, then (by Def. 17.) F is the accidental point of all lines parallel to EC, or perpendicular to the horizon. Also draw EA parallel to SH; and then EA is to be taken for the height of the eye, ES the principal ray, AH the line of station, and SH the picture. Then in order to draw upon such a picture, (in Fig. 74.) draw SD for the 74.
horizontal line, and make SD equal to SE, and D is the point of distance. Draw SH perpendicular to SD, and equal to SH (fig. 73.) for the vertical line; and draw AHB parallel to SD for the ground line; or this may be drawn first, if you will; also make HF equal to HF (fig. 73), and F will be the accidental point of all lines perpendicular to the horizon. Thus all the requisites are transferred from fig. 73. to fig. 74. which done, the operations are to be performed as before-mentioned. Examples will explain the thing.

Ex. 1.

To find the image of a given point P. Let 74.
fall PI perpendicular to AB, and set PI from I to

A.

Fig. 74. A. Then draw SI from the point of ſight S, and DA from the point of diſtance D; and where they interſect at *p*, is the image of P. This is juſt the ſame proceſs as in the upright picture.

Ex. 2.

To find the image of a right line, parallel to the ground line.

Let PQ be the line given; from P and Q let fall perpendiculars upon the ground line AB, to interſect it at I and K. From I and K draw lines to the point of ſight, IS, KS. Set IP from I to A, and draw AD to the point of diſtance D, to interſect IS in *p*. Draw *pq* parallel to AB, cutting KS in *q*; then *pq* is the image of PQ. Or find the point *q* the repreſentation of Q, as *p* was found, and draw *pq*.

Ex. 3.

To find the image of any line in the geometrical plane.

Let PL be the line given. Find *p* the image of P, one end of the line as in the firſt example. And likewiſe *l* the image of L the other end of the line, the ſame way; then draw *pl*, which will be the repreſentation of PL, as required.

Ex. 4.

To find the image of a plane figure given in the geometrical plane, on an inclined picture. Let PQLR be a ſquare, whoſe two oppoſite ſides are parallel to the ground line AB. Find the repreſentations of all the points P, Q, L, R; at *p*, *q*, *l*, *r*; and draw the lines *pq*, *ql*, *lr*, *rp*; then *pqlr* is the image of the ſquare PQLR.

Or thus, let fall perpendiculars from all the angles upon the ground line AB, to interſect it at I and K; draw IS, KS to the point of ſight S. Set off

off IR from I towards A, from which point draw a line to the point of distance D, intersecting IS in *r*. Also set off IP from I toward A, and from that point draw a line likewise to the point of distance D, to intersect IS in *p*. From *r* and *p* draw two lines parallel to AB, as *rl*, *pq*, intersecting KS in *l* and *q*; then *pqlr* is the representation of the square PQLR, whose two sides are parallel to the ground line AB. Fig. 74.

Ex. 5.

To draw the image of a line parallel to the vertical line of the inclined picture. Let SD be the horizontal line, AB the ground line, S the point of sight, D the point of distance, as before; and let P be the foot of the line in the geometrical plane. Draw PI perpendicular to AB, make IL = PI. Then draw SI, LD to intersect in *p* the image of P, the foot of the line. Make IA equal to the length of the line, which stands not perpendicular but sloping; draw AS, and from *p*, draw *p*G parallel to AI, cutting AS in G. Draw *pg* parallel to SH, and equal to *p*G, then *pg* is the image of the line given. 75.

If the line had stood in the ground line at I, you had no more to do, but to draw a line from I parallel to SH, and equal to IA, the length of the line proposed.

Ex. 6.

To find the representation of a line perpendicular to the horizon. Let Q be the foot of the perpendicular upon the geometrical plane, and CN its height. Find the image of Q, by Ex. 1. which will be at *q*. The picture being in the position SH, fig. 73. From the top of the line C, draw CM parallel to the vertical line, then MCN will be the profile of the lines CN, CM. Therefore make QO = NM, and O will be the situation of

M

Fig. 75. M upon the geometrical plane. Then find the image of O, which will be at *o*. Alſo find the image of MC whoſe foot is at *o*, by Ex. 5. this will be *oc*, which is drawn parallel to SH, and equal in repreſentation to MC. Laſtly, draw *cq*, and that will be the repreſentation of the perpendicular CN, ſtanding at Q, whoſe image is *q*.

For ſince CM is drawn parallel to the vertical line, the line NM is perpendicular to the ground line or baſe of the picture; therefore the triangle CMN is the profile of the ſlant line, the perpendicular line, and the baſe. And ſince N is at Q, M will be nearer the picture as at O; therefore *q* is the repreſentation of Q or N, and *o* is the repreſentation of O or M; and *oc* being the repreſentation of MC, therefore the triangle *ocq* is the repreſentation of the triangle MCN; and *cq* is the repreſentation of CN.

Otherwiſe.

Find the accidental point F of lines perpendicular to the geometrical plane, as directed before. Alſo find *q* the repreſentation of Q, the foot of the perpendicular as before. Thro' F draw *qc* for the indefinite perpendicular ſtanding at *q*, which muſt be terminated thus; draw the ſlant line MC as before, and ſet its length from K to T in the perpendicular KV; then draw ST which will cut *qc* in *c*, the top of the perpendicular line required.

For the images of all lines perpendicular to the horizon tend to the accidental point F; and the image of N or Q is at *q*. Draw *oc* perpendicular to AB, to cut SK in *o*. Then if KT be the appearance of CM at K in the ground line; *oc* will be its appearance at *o*, by Prob. XI. therefore *c* is the top of the image, and therefore *qc* is the image of the perpendicular required.

Ex.

Fig. 76.

Ex. 7.

To draw the representation of any floaping line. Let the foot of the given line be at P in the geometrical plane; suppose a line drawn from the top of this line parallel to the vertical line, to cut the geometrical plane in the point Q, and let the length of that be CM. Find the representations of the points P, and Q, at *p* and *q*, by Ex. 1. Set off MC from K to B, in the horizontal line AB, and draw SB from the point of sight. Draw *ql* parallel to AB, to cut SB in *l*; and draw *qc* parallel to SH and equal to *ql*, then *c* is the image of the top of the line. Therefore draw *cp*, and it will be the image of the given floaping line drawn to P. For it is evident by the process in Ex. 5, that *cq* is the representation of the line CM, drawn to Q. Therefore *cp* is the image of the given line.

By the help of this example any solid may be drawn upon an inclined picture; by drawing all the out lines thereof, and joining their tops by right lines, as those in the solid are drawn. But it is best to draw all the parts in separate papers.

Ex. 8.

To draw an oblique parallelopipedon, whose axis is parallel to the vertical line, and one face parallel to the picture, and the base a square. 74.

Let AB be the ground line, S the point of sight, D the point of distance. Let the base of the solid be described in the geometrical plane, according to the given situation, as at PQLR, which is a square base. Draw this in perspective, as shewn in Ex. 4. which let be *pqlr*. This done, we must proceed to raise the heights, at the places *p*, *q*, *l*, *r*, as directed in Ex. 5. thus, set the length of the axis or any side of the parallelopipedon, from B to C in the perpendicular BC; draw the lines SB, SC; then

SBC

Fig. 74. SBC is a flying ſcale to take off the altitudes. Draw *rl*1 and *pq*2 parallel to AB, to interſect SB in 1 and 2. Then draw 13 and 24 parallel to BC, to cut SC in 3 and 4. At *p*, *q*, *r*, *l* raiſe perpendiculars to the ground line AB; and from 3 and 4 draw lines parallel to AB, to interſect theſe perpendiculars, which will determine the top of the ſolid. Thus the parallel 3*wx* will cut the perpendiculars at *l* and *r* in the points *w* and *x*; and the parallel 4*t* will cut the perpendiculars from *p* and *q* in *t* and *v*. Therefore joining the points *t*, *v*, *w*, *x* with right lines, you have the upper face of the ſolid. Here the lines *pq*, *ql*, and *qv*, which are hid from the eye, are not drawn. In this example all the lines terminating the ſeveral planes, are either parallel to the ground line AB, or tend to the point of ſight S.

Thus all bodies which lean the ſame way as the picture, and incline as much, are as eaſily drawn in perſpective, upon an inclined picture, as bodies perpendicular to the horizon, are upon an upright picture, and by the very ſame rules. But when they ſtand in any other poſition, there is required more labour to draw them; and ſo there is in an upright table, when the bodies are not perpendicular to the horizon; but the labour in one caſe is no greater than that in the other; and they are both done by ſimilar methods.

Ex. 9.

77. To draw a cube upon an inclined table, ſeen angle ways. Let AB be the ground line, SD the horizontal line, S the point of ſight, and D the point of diſtance. PQLR is the baſe of the cube laid down on the geometrical plane, in the ſituation required. Let this ſquare PQLR be drawn in perſpective, by the method in Ex. 4. and let its image be *pqlR*; *p* being the image of P, *q* of Q, and

Fig. 71.

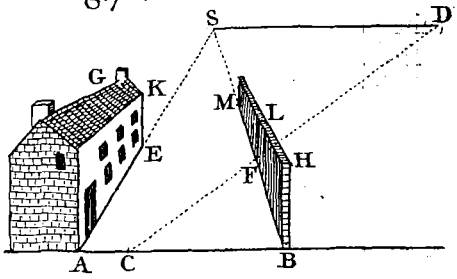

72.

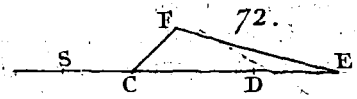

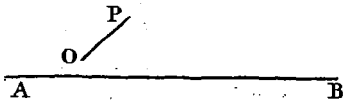

73

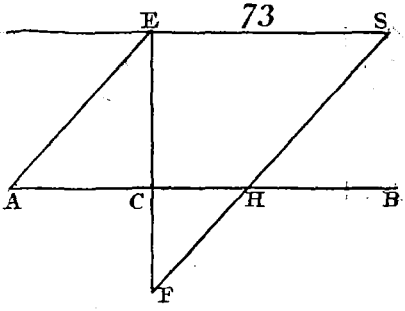

74.

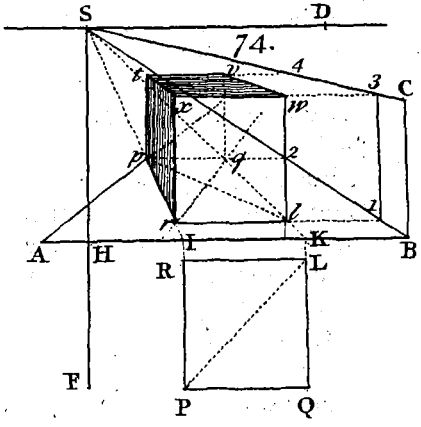

75

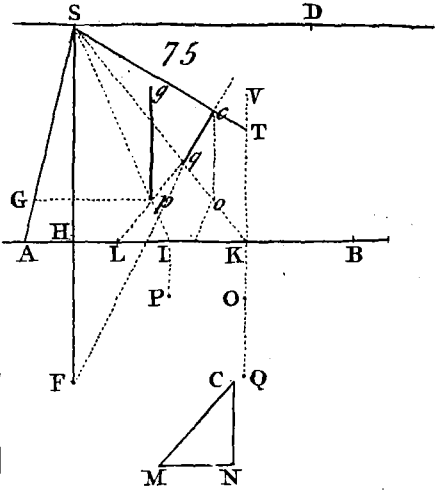

76.

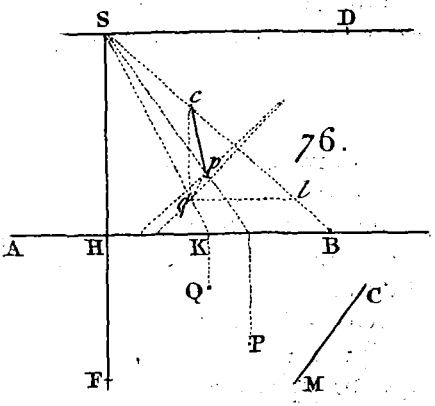

and *l* that of L; the point R in the ground line being common. Then at the points *p*, *q*, *l*, R, we must raise the sides of the cube, which are perpendicular to the base in the solid, but must pass thro' their accidental point in the picture. Therefore find the accidental point F, of lines perpendicular to the horizon as before. And from F draw lines thro' *p*, *q*, *l*, R. Then to terminate them at the top of the cube, proceed by examp 6; thus. Let CN be the perpendicular height of the cube, draw MN perpendicular to it, and draw CM, making the angle CMN equal to the angle which the picture makes with the horizon. Then take CM in your compasses, and set it perpendicular at the points G, R, I, where S*p*, S*q*R, and S*l*, intersect the ground line. Let these perpendiculars reach to *g*, *r*, and *i*. Then thro' S and these points draw lines to intersect the lines drawn from F; that is, draw S*g* to intersect F*p* in the point 1, the top of the side *p*1. And draw S*r* to intersect F*q* and FR in 2 and 4; then 2 is the top of the side *q*2; and 4 is the top of the side R4. Also draw S*i* to intersect F*l* in 3, the top of the side *l*3. Then draw the lines 12, 23, 34, 41, for the upper face of the cube. Fig. 77.

One may observe, that since the sides PR, RL, &c. make half a right angle with the ground line, the point of distance D, will be the accidental point of the sides *pq*, R*l*, and also of their parallels 12, 43. And for the same reason the other point of distance will be the accidental point of R*p*, *lq*, 41, 32. And if the cube was in any other position, the accidental points might be easily found in the horizontal line SD; because SD is the vanishing line of the base, and top of the cube, being both in or parallel to the geometrical plane.

In all these examples, I have made use of the same picture, in the same position, the same point

Fig. of ſight and point of diſtance; and in general of
77. the ſame profile of the picture as you have in fig. 73. And in all theſe examples the picture is ſuppoſed to lean backward; but all theſe things may as eaſily be done, if it leans towards you. In that caſe, the accidental point of lines perpendicular to the horizon will be above the point of ſight; but all operations will be the ſame. But for variety, I ſhall give one example where the picture leans forwards.

Ex. 10.

78. To draw a hexagonal right priſm, upon an inclined picture. We ſhall here ſuppoſe the picture to lean as much forward, as it before leaned backward, and that the height of the eye and the principal ray, remain the ſame. Let PQRTVZ be the hexagonal baſe deſcribed upon the geometrical plane, AB the ground line, SD the horizontal line, S the point of ſight, D the point of diſtance. Draw P1, Z2, V3 perpendicular to AB, the parallel ſides PQ, TV being ſo. From the point of ſight draw S1, S2, S3; by means of which, draw the baſe PQRTVZ in perſpective, which let be *pqrtvz*. Then to raiſe the images of the perpendiculars at the points *p*, *q*, *r*, *t*, *v*, *z*, proceed thus, at the points 1, 2, 3, raiſe the perpendiculars 16, 27, 38, each equal to the ſlant line CM, in the right-angled triangle MCN; where the angle CMN is the inclination of the picture, and CN the height of the priſm. Draw the line S8 from the point of ſight S; then from *v* and *t* draw lines towards F, (the accidental point of lines perpendicular to the horizon,) to cut S8 in the points 4 and 5, then *v*4, *t*5, repreſent two of the perpendicular ſides of the priſm. Again, draw the obſcure line S7; and from *z* and *r*, draw lines to F, to cut it in *o* and 9; then *zo*, *r*9 will be two more ſides of the priſm. Draw alſo the obſcure line S6; and from *p and q*, draw lines to F,

F, to cut S6 in the points *n* and *c*; then *pn*, *qc* are the two other sides of the prism; then joining all these points by right lines, you have the top of the prism *nc*9540. And the planes being shaded, you have the true representation of the prism *vzpqn*5, upon the inclined picture. Fig. 78.

I suppose these examples are sufficient to shew the method of drawing upon inclined pictures.

SCHOLIUM.

It appears from the practice, in all these examples, that the image of any original figure in the geometrical plane, will fall exactly in the same place of the picture, whether the picture lean forward or backward, or be upright; provided the principal ray, the length of the picture, and distance of the object from the ground line remains the same. But in objects elevated above the geometrical plane, the case is otherwise; and they will have a different appearance according to the different position of the picture. The principal use of drawing upon inclined pictures, is for painting any images upon the cieling of a room, or on any vaulted roof, or on the cupola of a church, &c. where the surface to be painted on, is in an oblique position.

As to the shadows of bodies; the rules are the same as in upright pictures; only instead of lines perpendicular to the horizon we must use lines parallel to the vertical line; and for lines perpendicular to the picture, make use of lines parallel to the line of station or to the principal ray. In difficult cases, the progress of the shadow may be traced out as it falls upon any planes, or upon any bodies, that are in its way; which is easily done from the situation of the light. And then these shadows, or parts of shadows, must be taken for

Fig. real objects, and so drawn in perspective by the common rules.

PROB. XXVIII.

To draw the picture of any object mechanically.

This may conveniently be done by help of a candle or lamp. Let the object be placed near a wall, and a light, such as a candle or lamp, placed at a good distance from it, or the sun's light may be made use of; let this light project the shadow of the given object upon the wall behind it in lines nearly perpendicular to the wall. Then the shadow of the body would shew the appearance of the body to an eye placed where the light is, if the body was removed, and the shadow remained there. Therefore we must trace out all the out-lines of the shadow, with a pencil, upon the wall; which is very easy to do where they appear; but where the shadow of any part is intercepted by some other part; there will be some trouble. To find the shadow of any point, so placed as that its shadow cannot fall upon the wall; take a slender rod, and put one end of it to touch that point; and fasten the rod there by some means or other; then removing the body, whilst the rod remains fixed; the shadow of the end of the rod will shew the place where the shadow of that point of the body would fall. Then replacing the body, you may proceed thus with any other point of the body, or as many points as you will. If any line in the object is hindered from casting its shadow upon the wall; the place of the shadow will be found in like manner; lay a slender rod close to the line, and mark the length with chalk; then remove the body, and where the shadow of that part of the rod, which you marked, falls upon the wall; there is the shadow of that line

line in the object. And thus any lines in it may be drawn. Fig.

Or the shadows of these points and lines may be found thus, take two strings and extend them cross one another; so that the shadow of their intersection may fall on the given point of the object. Then if the body be removed, the shadow of the intersection of the strings, will fall upon that point of the wall where the shadow of the given point of the body would fall. In like manner extend a single string, so that a knot in it may fall upon the given point of the body, and fixing it there, remove the body, and the knot will cast its shadow, where the shadow of the given point of the object would fall upon the wall. Also extend a string, so that its shadow may fall upon any line in the body which we want to describe; and mark the length on the string, by tying two knots, or any other way. Then removing the body, that part of the string will cast a shadow upon the wall, where the shadow of the line in the object would fall. Other methods may be contrived, to get the shadows of such points, as are hindered from falling on the wall. And some such method may be contrived without removing the body, and being at the trouble to place it again. It may be thus, if your cross strings are long enough to cast their shadows upon the wall, on every side of the body, whilst their intersection casts its shadow upon the given point of the object; continue these shadows behind the body, upon the wall, till they intersect; and it is evident, the point of intersection will be the place where the shadow of the given point of the body will fall. And thus you may find the shadows of as many points as you will, and consequently of as many lines as you will, without stirring the body.

Instead of a light, the eye may be used, keeping it fixed in the place where the light should be.

Fig. For the eye will project any point of the object upon the opposite wall, which may be marked there by help of an assistant; and thus one part after another, and so the whole body, may be projected upon the wall. Also if one end of a string be fixed where the light should be, and taking hold of the other end, and drawing it streight; if the string be made to pass along the out-lines of the object, the end of the string, by help of a pencil, may be made to describe the figure thereof upon the wall. And thus by means of the string, the image of the body will be projected upon the wall, the same as by the shadow.

Otherwise.

79. To delineate any object; make a square frame DE; divide the space into small squares, by threads fixed to the sides, parallel to one another and to the sides of the frame, and at equal distances. Set up a stand FH, upon the base FG; this must have a small hole at H to look thro; it is fixed in the base, parallel to the frame DE. Also let the paper on which the draught is to be made, be divided into the like small squares. Then placing the object beyond the frame in a proper situation; look at all the parts thereof successively thro' the hole; and observe in what squares the several parts appear, and put them into the correspondent squares in your paper; so at last you will have the picture of the whole object on your paper. These squares may be drawn in black lead, and rubbed out afterwards.

There are also instruments contrived, by the help of which one may draw the appearance of any object; but the construction of them is difficult, and therefore I shall say no more about them.

What is here said of the projecting the image of a body upon a wall or any plane surface, is easily applicable

applicable to any curve ſurface. For wherever the Fig.
ſhadow of any point falls by the light, there will be the image of that point. And likewiſe where the ſhadow of any line falls upon the curve ſurface, there will be the image of that line; for it will be where the plane paſſing thro' the luminous point and that line, cuts the curve ſurface. And the caſe is the ſame, if the figure is projected upon that curve ſurface, by rays drawn from the eye, placed where the light was.

PROB. XXIX.

To draw a deformed or monſtrous picture upon a plane, which ſhall appear regular, from a certain point.

Make a ſquare ABCD, and divide the ſides in- 80.
to as many equal parts as you will; and draw lines 81.
thro' all the points of diviſion, parallel to the ſides; theſe lines will divide the great ſquare into a number of little ſquares. In this ſquare draw the figure true which you want to appear deformed.

Again draw any line *ab*, which divide into as many equal parts as AB is divided into. From the middle point *e*, draw the line *e*V perpendicular to *ab*, and VS perpendicular to *e*V. Alſo draw the lines *a*V, *g*V, *h*V, *b*V, thro' the equal diviſions *g*, *h*, &c. Alſo draw *b*S, and where it cuts the former lines drawn to V, draw lines parallel to *ab*; then *abcd* is a deformed ſquare, and all the ſmall ſpaces repreſent the correſpondent little ſquares in the great one ABCD. Therefore in all the cells or little ſquares of *abcd*, draw the ſame part of the figure as you find in the correſpondent cells of ABCD; ſo you have the deformed image required. Then ſuppoſe VS to ſtand perpendicular to the plane *abcd*; if the figure be viewed by the eye

Fig. 80. at S, it will appear in its true shape, as you have it in ABCD. But from any other point it will 81. appear more or less deformed. And if the side *dc* was equal to the side DC, the figure would appear equally large, as that in ABCD would do, seen at the distance S*d*.

For if a square whose side is *dc* be erected upon *dc*, and as many parallel lines drawn in it; and if SV be erected perpendicular to the plane *a*V*b*; then the first parallel line in the square will be projected into the line 11, by the eye at S; and the second parallel line into 22, the third into 33, and the last or top of the square into *ab*; and the diagonal of the square would be projected into *db*. Consequently all the little squares would be projected into the correspondent cells in the space *abcd*. On the contrary, if the deformed figure *abcd* be given to be drawn in perspective, its image will be the said square standing upon *dc*, and all the little squares therein will be images of the respective cells in the figure *abcd*. And whatever is described in these cells, will appear in the little squares; and therefore the deformed picture drawn in the space *abcd* will be a regular picture in the square; that is, it will appear a regular head, seen from the point S in the air; but from any other point, the parts will appear to have different proportions, and therefore will be in some measure deformed.

This problem may be solved mechanically, by holding a candle at S in the air, and tracing out the shadow of the object (as the head here described) upon the plane surface given *abcd*, which may as easily be done upon a curve surface. But it is better if the candle shine thro' a small hole, made in a plate set at S. The sun's light may also be made use of for drawing either the original, or the deformed picture, which will be more or less so, accord-

according to the obliquity of the plane, it is to be drawn on. Fig. 80.

And by a like method, a deformed figure may be drawn upon the surface of a cone, or any solid; which will appear regular from a certain point of the axis. 81.

Cor. 1. *Hence, the trapezium abcd is the shadow of the perpendicular square whose side is dc. And every particular cell is the shadow of the correspondent small square in the upright one.*

For the shadow of any point of the square standing on *dc*, is where the line drawn from the luminous point S, cuts the plane V*ab*. And the shadow of any line in the square, will be where the plane passing thro' that line and the luminous point, cuts the said plane. Therefore the shadow of the top of the square, is the line *ab*; the shadow of one side is *ad*, and that of the other side of the square is *bc*; and the base *dc* coincides with the shadow. And thus the shadows of the lines or sides of any small square, are the lines that circumscribe the corresponding trapezium or cell. And consequently the space contained in each cell, is the shadow of the corresponding small square.

Cor. 2. *Hence, a picture that appears rude and irregular, when viewed directly, will appear regular and uniform, when viewed from a proper point.*

For the object *abcd* looked at directly, appears only a long trapezium; but to the eye of a spectator at S, it appears a regular square. For the shape of the image and all the parts of it in the picture, to the eye; is the very same as if the rays had come at first from that picture standing perpendicular upon *dc*; because they come in the same lines whether they come from the picture, or from the original. And if the colours of the several parts, and the shadows be the same in both,

a person

Fig. 80. 81. a person will rather judge it to be regular than deformed; by being more accustomed to that, and seeming more natural.

Cor. 3. *The practice of making deformed objects from regular ones, is no more than the inverse method of perspective.*

For in the direct method of perspective, the trapezium *abcd*, lying on the geometrical plane is projected into a square upon the line *dc*, to the eye at S, in the air. So on the contrary, a square in the picture is projected into the deformed image *abcd*, on the ground plane. In the first case the picture is between the eye and the object; but in the latter, they lie contrary.

SCHOLIUM.

Since shadows are no more than the deformations of objects falling upon some plane or other. Therefore the drawing of the shadows of bodies depends on the same rules, as finding their deformations. The rays of light passing by the outlines of a body project their shadows upon these planes; and the places where they fall will be found, by having the position of the light, and the shape of the body. Therefore the practice of these things depends upon some or other of the rules before laid down.

PROB. XXX.

To shew the uses of perspective in drawing.

The rules of perspective before laid down, are employed either in representing figures that lye in the geometrical plane, or objects that are elevated above that plane; and all objects whatever are either one or the other of these; and therefore the foregoing

foregoing rules are sufficient for describing any objects, and ought to be followed when we want any objects to be drawn perfectly exact, and mathematically true. And this is the best method when there are only right lined objects concerned, and but a few of them. But there are numerous objects that cannot be drawn this way, such as mountains, trees, ships, &c. In such cases all we can do is to get a few of the principal points of such objects, truly laid down; for to get all the points, is impossible, especially where curve lines are concerned, and the figures are irregular; but the rest of the work is to be done by hand. For the art of perspective only lays down geometrical rules for finding the images of certain points, but as the number of points in any object is infinite, the work would be infinite; except in their single case, where the points in the object happen to be connected by right lines; for then they will be right lines in the drawing, but in no other case; and therefore our only refuge is drawing by hand. Fig.

Then to gain a dexterity and exactness at drawing by hand; the best way is, first to draw some plain and simple objects in perspective, and then try to imitate them by hand; and where you find any fault, rub it out, or else throw them away, and do them over again; still endeavouring, to mend the former faults, and to make them more exact; which is as easy to do, as learning to write. When you have succeeded pretty well with one object, take a new one, and proceed the same way with that; and the like for as many as you please, till you improve in the art; and then you may make choice of more compounded objects which are harder to draw.

In objects that are more difficult to draw, let some of the principal lines be drawn by the rules of perspective, and finish the rest by hand; repeat this

Fig. this ſeveral times till you get them to your mind. Afterwards draw fewer of the lines in perſpective, and finiſh the reſt by hand. And laſt of all draw none of it in perſpective, but do the whole by hand; and that ſeveral times over, till it be tolerably exact. And thus by proceeding from eaſy objects to thoſe that are harder, you'll at laſt acquire a habit of drawing truly and readily. But it is practice alone that muſt compleat any perſon in this art of drawing, a multitude of rules ſignifying little or nothing.

When a complicated figure is to be drawn, it would be a difficult thing to do every ſmall part of it by the rules of perſpective; but by incloſing it in a ſquare divided into little ſquares, it may be done then by a perſon ſkilled in drawing. For where curve ſurfaces are concerned, the practical rules can only ſerve to find a few points thereof, or ſome right lines, that may incloſe it; by which means the drawer may then deſcribe them ſufficiently true.

From what has been ſaid, any one may ſee that it is in vain to endeavour, by the practical rules of perſpective, to deſcribe the hollows or riſings of objects, their lights and ſhadows, or any irregular turnings and windings thereof. Thus the capitals and ornaments of pillars, cannot be deſcribed that way, from the multitude of lines required to do it, and would never be exact. Nor can ſuch objects as have not any determinate ſhape, be deſcribed this way; ſuch as clouds, hills, trees, valleys, rivers, &c. but are far better done by hand. For in ſuch as theſe, there is more latitude allowed, and one can hardly miſtake ſo far as to make them appear monſtrous or unnatural. The turnings and windings of rivers, the ſhapes of trees, their branches and leaves; the limbs of animals, the features of men and women, the folds of their garments, could

could never be performed by the ſtrict rules of Fig.
perſpective.

We muſt be content therefore, to apply the Art of Perſpective to what it is capable of doing to perfection; and that is, laying down a general draught, which is to ſerve for a ground-work for our future operations; in which the ſeveral places and ſituations of objects are to be aſſigned. But then the finiſhing and beautifying the piece muſt be left to the ſkilful hand of the drawer. Indeed it is moſt uſeful where it is moſt wanted, and that is in deſcribing ſuch objects as are terminated by right lines, eſpecially perpendicular ones; ſuch as buildings, pieces of architecture, regular figures, and ſuch like; where a deviation from their true ſhape or poſition would be very ſenſible. In other caſes, all we can do by the mathematical rules, is to find a few points which ſerve for a guide to draw the reſt by. Thus in deſcribing a circle, we find as many points in it by rule and compaſs, as we think ſufficient, and then carry a curve thro' them by hand; ſo that ſtrictly ſpeaking no part of this image is found by geometrical rules, but theſe few points; all the reſt owes its being and exactneſs to the judgment and hand of the artiſt.

The principal uſe then of Perſpective, is for informing the judgment; for by being accuſtomed to draw objects in perſpective, one may better know which way ſuch and ſuch lines ſhould run, and where they ſhould end, and to what points they ſhould converge; and from thence judge better how an object ſhould appear, by ſhewing the relation between the object and its image; and by that means directs the hand to draw them, and the eye to diſcover any defect in the drawing, which otherwiſe would not be ſeen. Likewiſe when the general plan, and the principal parts are laid down exactly by rule; the minuter parts will naturally come

into

Fig. into their proper places, and all errors will then be easily avoided, and easily rectified. So that makeing use of the rules for drawing the principal parts, where they can conveniently be used; will give the picture such a form as will guide the eye of the drawer, in describing the other parts; and direct him to draw the rest, and to finish the draught, and make it perfect and complete.

When objects are at a great distance, the magnitude must be diminished in proportion; because they appear under a lesser angle than when nearer. And in shading them, the shadows must fall all one way, that is from the sun. And in colouring them which ought to be done at last; the colours must be stronger near hand, and fainter further off; till at a great distance they lose themselves in a bluish mist. And in all things you must perform the same thing in the picture, as you observe with your eye.

The business of *designing*, is the work of a master; this is forming a general idea of some large work, consisting of many parts, whose relation and connection, is entirely the invention of the artist. This may be some history piece, or contrived to shew some great transaction or event.

At first the artist must make only a rough draught of his design, and in a small compass: this he is to correct and mend, as he sees it necessary; and the outlines need only be drawn in black lead, to be rubbed out occasionally. When he has fixed on the manner he would have it done, he may draw it larger and more compleat. And when he has got all the parts to his satisfaction, he must at last draw it, and all the parts of it, according to his design, and then proceed to the colouring it, if it is to be painted. Here drawing according to a design, is a different thing from drawing the pictures of objects, we have before us. For this picture

Fig. 77.

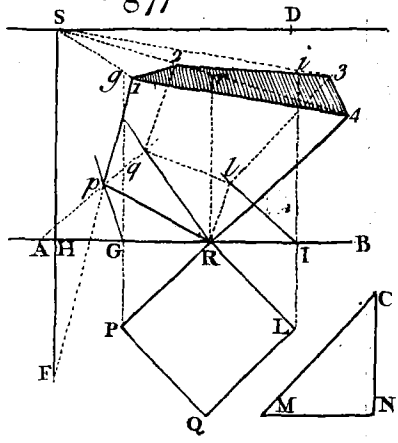

78.

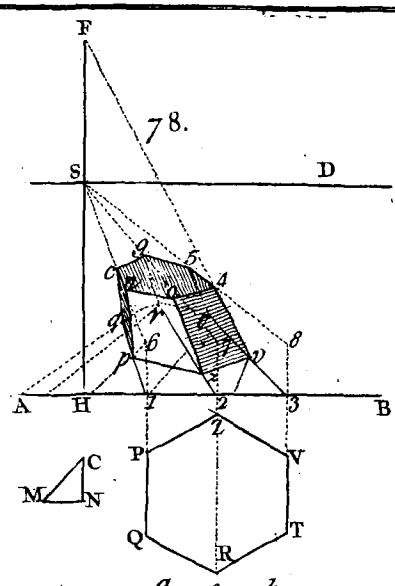

79

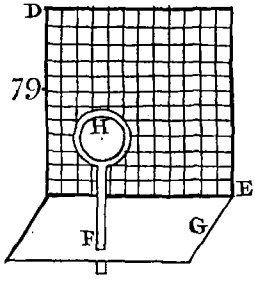

80.

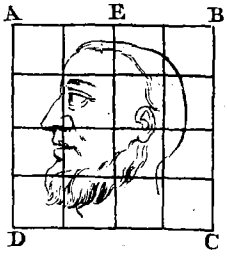

81.

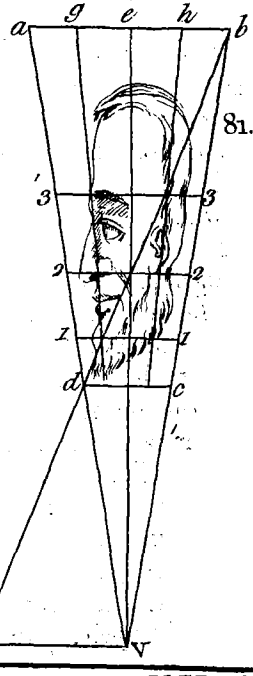

Perspective

P1. XV. *the end.*

ture or design has no object but what exists in the ideas and mind of the artist. And therefore to make an elegant piece, the artist should have a good invention, and be well acquainted with the nature of things, that he may proportion things truly, in his draught; and observe that the connection of the several parts be according to nature; and that they be pleasing and instructive. To do this requires a good genius, and a great deal of practice. His design is formed entirely in his own head, which is to be executed by the rules beforementioned. And this branch of the art is gained by degrees, first by drawing pictures by sight; and afterwards copying from good original draughts; observing to draw the outlines first, and then the inner parts, and then to shadow them. And last of all, they that would become complete, must make themselves masters of Perspective. Fig.

FINIS.